CHAPTER 3 — PERSONNEL, TRAINING, AND EMPLOYEE RELATIONS

ARTICLE 1 — EQUAL EMPLOYMENT OPPORTUNITY

Effective February 2, 1990

31010.1 Policy

The Department shall implement EEO and affirmative action principles in its personnel practices.

All decisions related to personnel policy and practice in the area of recruitment, testing, selection, placement, employment development, training, and advancement shall be made on the basis of applicant's or employee's capabilities to adequately perform the specific job for which they have applied. All disabled applicants and employees shall be given consideration for any reasonable accommodation. No one shall be excluded from participation in, be denied the benefits of, or be subjected to discrimination, under any program or activity under the jurisdiction of the Department because of:

- Race, color, ancestry/ethnicity or national origin.
- Creed or religion.
- Age.
- Sex or sexual orientation.
- Physical or mental disability.
- Political affiliation/beliefs.
- Retaliation for having filed discrimination charges.
- Marital status.
- Medical condition (cancer).
- AIDS.

31010.2 Purpose

This section specifies:

- The EEO Program which shall be used to reach the Department's affirmative action goals.
- The appeal process which shall provide a means to resolve complaints of discrimination.

31010.3 Definitions

Affirmative Action

An active effort to correct the effects of past discrimination by recruiting, employing, and promoting qualified members of groups that have been excluded by past personnel practices. Affirmative action is more than passive non-discrimination; it is an active means toward the end result -- EEO.

Charging Party

Any individual or group of individuals who believe the Department has discriminated against them in violation of a state or federal EEO law or regulation.

Disabled Person

Anyone who:

- Has a physical or mental impairment which substantially limits one or more of such person's major life activities; or
- Has a record of such impairment; or
- Is regarded as having such impairment.

Throughout these guidelines, the term “handicapped individual” is synonymous with the term “disabled person” or “persons with disabilities” or similar variations. The preferred term in the disabled community is “disabled”, while the federal legal and regulating term is "handicapped".

Disability

Generally, a disability is defined as a condition of impairment, physical or mental, having an objective aspect that can usually be described by a physician.

Handicap

Conversely, a handicap is defined as the cumulative result of the obstacles which a disability interposes between the individual and their maximum functioning level.

Interpretation of Terms in Definition:

Physical or Mental Impairment

Physical or mental impairments are not, in general, defined by listing specific conditions and diseases because of the difficulty of ensuring the comprehensiveness of any such list. The term includes, but is not limited to:

- Any physiological disorder or condition, cosmetic disfigurement, or anatomical loss affecting one or more of the following body systems: neurological; musculoskeletal; sense organs; respiratory; speech organs; cardiovascular; reproductive; digestive; genito-urinary; hemic and lymphatic; skin; and endocrine; or any mental or psychological disorder, such as mental retardation, emotional or mental illness, and specific learning disabilities.

Major Life Activities

- Major life activities means functions such as caring for one's self, performing manual tasks, walking, seeing, hearing, speaking, breathing, learning, and working.

Record of Impairment

- Record of impairment means has a history of or has been misclassified as having, a mental or physical impairment that substantially limits one or more major life activities.

Regarded as Having an Impairment

- Regarded as having such an impairment means:
  - Has a physical or mental impairment that may not substantially limit major life activities but that is treated by an employer as constituting such a limitation.
  - Has a physical or mental impairment that substantially limits major life activities only as a result of the attitudes of others toward such impairment.
  - Has no impairments but is treated by an employer as having such an impairment.

Substantially Limited

A disabled person is substantially limited if such person is likely to experience difficulty in securing, retaining, or advancing in employment because of a disability.

Qualified

A disabled person is qualified when such person is capable of performing a particular job with reasonable accommodation relative to such person's disability.

Determination

The above definition and interpretation identifies who may be considered disabled and should be included in affirmative action plans and programs for the disabled. Individuals with acute disabling conditions such as appendicitis, broken arms, pulled muscles, etc., which are not stabilized will not meet the definition of disabled person until the permanence of the residual medical impairment/condition is determined by a medical doctor.

Alternative Job Placement

The reassignment of an employee who can no longer perform the duties of their current position to another position in either the same or a different classification, where they are able to perform the duties of the position satisfactorily.

Discrimination Complaint Investigator

A departmental employee trained in discrimination complaint processing with emphasis on investigations and fact finding.

EEO Counselor

A departmental employee trained in discrimination complaint processing with emphasis on informal resolution.

EEO

The legal right of all persons to be afforded full and equal consideration for employment, retention, and advancement on the basis of merit.

External Discrimination Complaint

A formal complaint alleging discrimination filed with a state/federal compliance agency or court against the Department by a charging party.

Good Faith Efforts

Specific efforts initiated and acted upon in good faith to attract and appoint minorities, women, and disabled persons into the departmental work force.

Internal Discrimination Complaint

A formal complaint alleging discrimination filed with the Discrimination Complaint Manager of the Department.

Reasonable Accommodation

Those job-related adaptations which adjust the difference between the mental or physical limitations of the person and the requirement of a particular job. Reasonable accommodation may include, but is not limited to, any one or a combination of the following:

- Altering the work environment.
- Providing special equipment and assistive devices, e.g., special telephone equipment, "talking" calculators, specially designed desks, chairs, communication devices.
- Work site modification, e.g., adjustments to equipment height, rearrangement of furniture and equipment.
- Adjusting work schedules, including reduction of work and job sharing.
- Job restructuring, e.g., modification of work hours and/or changes in job duties.
- Support services, e.g., interpreters, readers, driver assistants.
- Architectural changes, e.g., building or structural modification.
- Authorizing leave of absences and providing frequent rest breaks.
- Retraining and considering alternative job assignments through transfer, demotion, or a training and development assignment.

Sexual Harassment

A form of discrimination typically defined as unsolicited or unwelcomed sexual overtures.

31010.4 Responsibility

Executive Staff

The Chief Deputy Director; deputy directors; assistant directors; and the General Manager, PIA, shall:

- Ensure the overall effectiveness and positive results of affirmative action efforts within their jurisdictions.
- Ensure that staff are aware of affirmative action goals, policies and procedures.

- Monitor compliance with affirmative action procedures.
- At the request of the Assistant Director, Affirmative Action, designate:
  - EEO counselors who are functionally responsible to the local hiring authority when performing EEO counseling. The number and level of EEO counselors at each location shall be determined by the Assistant Director, Affirmative Action.
  - Discrimination complaint investigators, who shall report directly to the Program Manager, Discrimination Complaint Unit, while they are assigned to an investigation. The number of investigators who shall not be below the level of captain or its equivalent, unless specifically approved by the Program Manager, Discrimination Complaint Unit, shall be determined at each location by the Assistant Director, Affirmative Action.

The Assistant Director, Affirmative Action, shall:

- Provide staff leadership in the development and implementation of the Affirmative Action Program.
- Develop and monitor the implementation of departmental policy statements, regulations, and procedures pertaining to the Department's Affirmative Action Program.
- Serve as liaison between the Department and compliance agencies, minority organizations, women's organizations, and community action groups concerned with EEO and affirmative action.
- Assist local administrators with the establishment and implementation of local EEO objectives.
- Evaluate the effectiveness and efficiency of the Affirmative Action Program, when necessary, by monitoring for compliance with federal and state laws, rules and regulations.
- Provide the final departmental level of review for discrimination complaints filed and formally investigated.
- Review the Department's programs and procedures related to personnel activities and make recommendations for any changes necessary to remove barriers to attainment of EEO.
- Review and approve departmental examination and recruitment plans.
- Provide guidance to all departmental EEO committees and Women's Liaison Councils.
- Develop statewide training programs sensitive to the issues of affirmative action.
- Require full cooperation from all employees in efforts to resolve EEO complaints.
- Render the departmental final decision and response to a charging party and/or state/federal compliance agency on a timely basis.
- Initiate the conciliation process as appropriate and necessary.

Program Manager, Discrimination Complaint Unit

The Program Manager, Discrimination Complaint Unit, shall:

- Assign, direct, and provide technical assistance to discrimination complaint investigators and field staff in the timely completion of formal investigations and/or responses to inquires from state and federal agencies.
  - Establish and maintain a roster of employees trained in discrimination complaint investigations.
  - Provide full support to the fact finding process and assure that investigators perform without fear of reprisal.
  - Notify the Assistant Director, Affirmative Action, and the appropriate hiring authority upon the assignment of an investigator.
- May conduct discrimination complaint investigations of the most sensitive and complex nature.
- Monitor all discrimination complaint activities.
- Follow through to ensure deadlines and target dates are met.
- Acknowledge receipt of all formal charges and/or complaints.
- Maintain appropriate files and publications.
- Coordinate with the Department's LAD and the AG’s Office for legal counsel.
- Maintain liaison with appropriate organizational units, state and federal agencies, and/or individuals.
- Develop training programs for EEO counselors and discrimination complaint investigators.
- Review discrimination complaint investigative reports and make recommendations for appropriate disposition of formal complaints.
- Evaluate the program's effectiveness and recommend changes as necessary.

Chief, HRS

The Chief, HRS, shall:

- Annually develop an Affirmative Action Plan which outlines the activities necessary in the Department's efforts to attain EEO.
- Plan, coordinate, review and evaluate the implementation and effectiveness of the Department's Affirmative Action Program and submit recommendations to the Assistant Director, Affirmative Action, for improvement and corrective action required.
- Assist and advise local administrators and their staff on the interpretation and implementation of the Department's Affirmative Action Program.
- Serve in the capacity of Women's Program Manager to include:
  - Development, implementation, and maintenance of an upward mobility and career development program for departmental employees.
  - Evaluation of departmental programs and policies to ensure equitable participation of females.
  - Representation of the Department in meetings and on task force groups related to women's issues.
- Assess the training needs of departmental employees related to the Department's Affirmative Action Program.

- Maintain liaison with the SPB's Affirmative Action and Merit Oversight Division staff regarding departmental progress in meeting affirmative action goals.
- Provide technical assistance, coordination, and consultation in areas related to the employment of disabled persons.
- Work with management and the Personnel Operations Unit in identifying and developing upward mobility opportunities within the Department.
- Develop, assist, and monitor the implementation of program objectives that will improve present working employees in lower paying classifications in their upward mobility within the Department.
- Make recommendations to Chief, Personnel Services, in the development of bridging classifications from clerical to professional and technical classifications.
- Provide job opportunity information to interested employees having an approved Upward Mobility Plan, CDC Form 915 on file.

Women's Program Coordinator

The Women's Program Coordinator shall:

- Develop and implement an active women's program within the Department.
- Conduct analytical studies and make recommendations on various positions available to women in the Department, and the means by which bridging classes may be used, thus promoting upward mobility for women.
- Formulate a plan for the women's program addressing the under utilization of women in professional classes and ensure that equitable representation is achieved whenever feasible.
- Implement and monitor special women's programs; e.g., Program Alternatives for Tradeswomen Hiring (PATH).
- Coordinate and assist in the implementation of career development training for women.
- Assist in the development and reviewing of the Department's annual affirmative action and upward mobility goals and timetables.
- Serve as staff resource to DWLC.

Hiring authorities shall:

- Ensure that EEO and affirmative action principles are integrated in the daily planning and operations under their responsibility.
- Strive to meet departmental goals and objectives.
- Appoint an Affirmative Action Coordinator at a level no lower than Correctional Administrator or PA for their institution or region. Any lower level of appointment, must be approved by the Assistant Director, Affirmative Action.
- Select and maintain a sufficient number of trained EEO counselors to serve their respective area of responsibility.
- Ensure that a suitable location is provided for complaints to be heard in private.
- Ensure the names and telephone numbers of EEO counselors are posted on bulletin boards or in conspicuous places.
- Ensure that EEO counselors perform their duties without fear of reprisal.

Affirmative Action Coordinator

- Assist local administrators with the development, evaluation and implementation of the EEO program, particularly the following areas:
  - Affirmative Action Plan.
  - Women's Program.
  - Upward mobility.
  - Disabled persons.
  - Annual language survey.
  - Special employment projects, i.e., Limited Examination and Appointment Program (LEAP), Work Incentive/Career Opportunity Development (WIN/COD), Program alternatives for Tradeswomen Hiring (PATH), etc.
  - Recruitment.
- Maintain familiarity with conditions and circumstances affecting affirmative action locally and departmentally.
- Provide staff leadership in the development and implementation of the local Affirmative Action Program.
- Develop a system to monitor Affirmative Action Program effectiveness and make recommendations for changes or improvement in personnel practices and other management activities which have impact on the Affirmative Action Program.
- Provide all necessary documents or regularly scheduled reports pertaining to affirmative action as requested by the Assistant Director, Affirmative Action.
- Provide a point of contact for coordination and liaison between local management and program staff, special interest groups and organizations, community leaders, etc., to keep these groups informed and to encourage united efforts for maximum benefit from affirmative action activities.
- Provide guidance and direction to EEO counselors for resolving complaints at the informal level.
- Document and report to the Assistant Director, Affirmative Action on a quarterly basis the number and types of counseling services provided.

Middle Managers/ Supervisors

All managers and supervisors shall:

- Implement personnel practices consistent with the Department's Affirmative Action Plan and disseminate affirmative action information to all employees under their jurisdiction.

- Make opportunities available for EEO targeted groups to participate in special and staff development assignments which will enhance an employee's ability to promote.

Supervisors shall:

- Encourage eligible employees to investigate opportunities for promotion or transfer by upward mobility means.
- Keep employees apprised of upward mobility opportunities.
- Review an employee's Upward Mobility Plan as part of the annual performance evaluation.

EEO Counselors

EEO counselors shall:

- Establish and provide an open channel of communication through which employees may discuss complaints and pursue informal resolution.
- Serve as a bridge between employees and management to help resolve discrimination complaints by discussing problems with employees and with supervisors or their associates, by advising employees on the issues, and by developing appropriate solutions whenever possible.
- Hear, answer, and advise individuals on informal complaints of discrimination.
- Direct individuals to the appropriate procedure if the issue of the complaints does not involve an allegation of discrimination.
- Explain how the discrimination complaint system works, including informing employees of their rights and responsibilities with regard to the internal discrimination complaint procedure.
- If the complaint is resolved to the charging party's satisfaction, present the charging party with a written report of agreement reached within five days of such agreement.
- If it is not resolved to the charging party's satisfaction, provide the charging party with a written report of inquiry within 20 days of initial contact.
- Consult with the local affirmative action coordinator as necessary.

Discrimination Complaint Investigators

The discrimination complaint investigators shall:

- Gather facts (not make judgments) which can be used to make a proper determination as to whether or not a discriminatory act has actually occurred.
- Begin an investigation within five days of assignment.
- Contact the charging party, verify the nature of the complaint, obtain details, and gather additional supporting evidence.
- Interview all parties involved and adhere to the provisions contained in the Peace Officers Bill of Rights as applicable.
- Confine the investigation to fact finding relevant to the particular case.
- Report immediately all problems encountered in the investigation to the Program Manager, Discrimination Complaint Unit.
- Submit a report of findings of facts to the Program Manager, Discrimination Complaint Unit, within the specified time period.

All travel and per diem expenses incurred by the assigned investigator during the course of the investigation shall be paid by the investigative (sending) location.

All appropriate training for discrimination complaint investigators shall be coordinated by the Program Manager, Discrimination Complaint Unit.

Employees

Each employee shall implement the Department's affirmative action policy in their activities. Any employee who willingly and knowingly fails to adhere to the intent of this policy shall be subject to appropriate adverse action.

31010.5 Sexual Harassment

It is unlawful for employers to discriminate on the basis of sex against any individual with respect to conditions of employment. An employer may be liable for the acts of their employees with respect to sexual harassment regardless of whether the specific acts were forbidden by the employer.

31010.5.1 Inappropriate Behavior

Behavior which constitutes sexual harassment includes, but is not limited to:

- Verbal harassment, e.g., epithets, derogatory comments, jokes or slurs.
- Physical harassment, e.g., impeding or blocking movement, gestures, or any physical interference with normal work or movement.
- Visual forms of harassment, e.g., derogatory posters, letters, poems, graffiti, cartoons, or drawings.
- Requests for sexual favors or unwanted sexual advances when this behavior:
  - Interferes with work performance.
  - Creates an intimidating, hostile or offensive working environment.
  - Influences or affects the career, salary, working conditions, job or other aspects of career development of an employee or prospective employee.
  - Is an explicit or implicit term or condition of employment.

The following behavior by Department supervisors and managers also constitutes sexual harassment:

- Failure to take corrective action when the supervisory or managerial employees know or reasonably should know that any employee in the line of supervision is being subjected to sexual harassment on the job by anyone.
- Retaliation against any employee or applicant for employment who complained of sexual harassment or who assisted or participated in any manner on behalf of a complainant in an investigation, hearing, or proceeding conducted as a result of an alleged sexual harassment.

31010.5.2 Corrective Action

When an employee believes that they are the victim of sexual harassment, it would be appropriate to:

- Inform the individual that their behavior is unwelcomed, offensive, or very inappropriate.
- Request informal assistance and counseling from supervisory or management personnel, the local EEO counselor, the Department's Women's Program Coordinator, or the Affirmative Action Officer if the employee feels threatened or has difficulty expressing disapproval.
- File a discrimination complaint based on sexual harassment.

Disciplinary action shall be taken, up to and including dismissal, against any employee who has engaged in obvious sexual harassment of another employee or applicant for employment.

31010.5.3 Adverse Effect on the Department

Cases of sexual harassment may have negative consequences, such as the following:

- Poor employee morale.
- Higher turnover.
- Lower productivity.
- Court proceedings which may result in back pay or punitive damage awards.
- Withdrawal of funds by the federal government.

31010.6 Goal Setting Process

Annual Report

The Department shall establish annual goals and timetables on hiring rates. These goals are reviewed, approved, and/or modified by the SPB and published in an annual report to the Governor and the Legislature.

The HRS annually shall compile and develop departmental goals and timetables using guidelines set forth by the SPB.

Dissemination

They shall disseminate annual goals and timetables to hiring authorities.

31010.6.1 Parity Base

California Civilian Labor Force Data

Based upon the California Civilian Labor Force (CCLF) data (1980 Census), the Department's primary work force composition goals by individual target groups are as follows:

White	69.8%
Black	06.6
Hispanic	17.2
Aisian	03.6
Filipino	01.6
American Indian (*Native American*)	00.7
Pacific Islander	00.3
Other	00.2
Female	42.8
Disabled	06.3

Client Service Population

As a secondary goal where the representation of a target group within a specific classification which has routine daily contact with inmates meets or exceeds the CCLF percentage for the target group, the Department may use the client service population (i.e., inmate population) as a parity base. The goal with the parity base is that the percentage of employees of the target group within the specific classification shall be at least 70 percent of the percentage of inmates of that target group.

Since the composition of the inmate population is constantly changing, secondary goals shall be revised annually based upon the results of the annual ethnic count of the inmate population.

31010.6.2 Hiring Rates

The Department develops and submits to the SPB three types of annual hiring rates as follows:

- Intake hiring rates are projections of appointments of new hires, permissive reinstatements, and transfers from other state departments.
- Promotional hiring rates are projections of promotional appointments of Department employees.
- Upward mobility hiring rates are projections of promotional or lateral transfer appointments into targeted classes (within designated job categories) identified as requiring additional action to reach Affirmative Action Plan goals.

31010.7 EEO Advisory Committees

Each institution/parole region shall establish an EEO committee to serve in an advisory capacity to the hiring authority. Hiring authorities shall ensure an ethnic and sex balance within the committees through additional appointments as necessary.

31010.7.1 Meetings

The committee shall meet at least quarterly.

31010.7.2 Membership

Membership shall include the following individuals:

- Warden or RPA and deputy RPA.
- Institution or regional affirmative action coordinator (chairperson).
- EEO counselor.
- DAC representative.
- Women's Liaison Council representative.
- Representatives from major work locations selected by the Warden/RPA.
- Representative from departmentally recognized advocacy groups.

31010.8 Women's Program

The program shall:

- Facilitate representation of women in the Departments work force at all levels (commensurate with their representation in the California Civilian Labor Force).
- Promote a career environment that encourages, supports, and provides for equal opportunity and for a full use of women in all job classifications.
- Ensure that systematic barriers contributing to the under-representation of women at specific levels are eliminated.
- Ensure that all aspects of the Department's affirmative action evaluation process include those specific areas that relate to women, including sex discrimination and the under-utilization of female employees from all ethnic groups.
- Facilitate the exchange of information on women's issues.
- Advise managers, supervisors, affirmative action coordinators, and women on how to recognize and deal with women's issues.
- Review departmental rules, procedures and policies, and make appropriate recommendations regarding their impact on women's issues.
- Assess program needs and identify problem areas to be remedied.
- Act as a resource for information pertaining to women's issues and the employment of women.

31010.8.1 Women's Liaison Council

The Departmental Women's Liaison Council (DWLC) is an advisory group to The Director and other departmental administrators and staff. The council reports to the Director and, at their direction, responds to requests for assistance from other departmental personnel.

31010.8.1.1 Functions

The DWLC shall:

- Assist the Department to identify, promote, and implement an effective program to achieve the equitable representation and utilization of women in all job classifications.
- Ensure that issues of particular concern to female employees are brought to the attention of management.
- Establish a channel of communication among female employees.
- Provide a forum for the informal resolution of problems of particular concern to female employees.
- Act as a resource to women to achieve labor force parity at each level by monitoring entry level and promotional opportunities, and assist in recruitment efforts.
- Participate in all meetings and task groups as assigned.
- Act as liaison between the DWLC and the local Warden or RPA.
- Act as liaison between the DWLC and local women's liaison councils.
- Disseminate information received at monthly meetings to women at the local level.
- Identify, encourage and assist in preparing women to promote.

31010.8.1.2 Membership

The DWLC shall include the following:

- The local WLC chairperson from each institution, parole region, PIA Headquarters, Central Office, and the Academy.
- Female employees from each work area shall elect a local representative and an alternate. All ethnic and occupational groups shall have an equal opportunity to be represented where possible.

The Assistant Director, Affirmative Action, or designee, shall serve as an ex-officio member of the DWLC.

The executive body of the DWLC will consist of a chairperson, co-chairperson, and recording secretary.

Selection of Executive Body

Nominations for appointments to the DWLC executive body will be conducted by a committee of five representatives selected by the incumbent chairperson. Committee representatives will be selected based on geographic location (north/south) and represented bodies (institutions, parole regions, Central Office, the Academy).

Election to the DWLC executive body will be staggered to ensure that only one-third of the executive body is changed at any time, and that the changes impact equally on geographic locations (north/south) and represented bodies (institutions/parole regions/Central Office). All DWLC terms will be a standard 24 months.

DWLC representatives will be allowed up to four hours of work time per week, as needed, to carry out their responsibilities as DWLC representatives. The local WLC chairperson shall be allowed an additional four hours of work time per week, as needed, to carry out their responsibilities.

31010.8.1.3 Term of Office

Council members shall serve a 24-month term.

- Representatives shall be selected on a staggered schedule to allow the selection of approximately one-third of the membership each six months.
- Local WLC chairpersons will be selected on a staggered schedule to allow the selection of approximately one-fourth of the DWLC membership each six months.
- No council member may serve more than two consecutive terms.
- No council chairperson may serve more than one consecutive term.
- Membership changes shall impact equally on geographic locations (north/south) and represented bodies (institutions/parole regions/central office).

31010.8.1.4 Resources

The Departmental Women's Program Coordinator shall serve as a staff resource for the DWLC.

The DWLC representatives shall continue with the duties and responsibilities of their specific assignment and shall be provided up to four hours of work time per week, as needed, and office space as necessary to carry out council responsibilities.

31010.8.1.5 Requirements

Members shall:

- Participate in all meetings and task groups as assigned by the DWLC.
- Serve as liaison between the DWLC and the Warden or RPA, local Women's Liaison Council (WLC) and other female employees.
- Provide input to the DWLC on issues of concern to female employees.

31010.8.1.6 Meetings

The DWLC shall meet at least quarterly and as called by the Director. Meetings shall be conducted by a chairperson elected by the membership during the first council meeting held in each fiscal year, to take office the following meeting.

31010.8.2 Local Women's Liaison Council

Central Office, the PIA, and each institution and parole region shall establish a local Women's Liaison Council to serve in an advisory capacity to its respective Warden/RPA; the General Manager, PIA; or Chief Deputy Director. The WLC shall:

Functions

- Assist the local facility to identify, promote, and implement an effective program to achieve equitable representation and utilization of women in all job classifications and assignments.
- Work with Affirmative Action personnel to ensure equitable treatment of women on the job, and bring to the attention of local departmental management issues of particular concern to females.
- Monitor entry level and promotional opportunities, and assist in recruitment efforts.
- Identify and seek solutions to problems that contribute to nonretention of women.
- Identify, encourage and assist in preparing women to promote.
- Act as a resource person to women at local work sites.
- Monitor local training and development assignments to ensure women are provided equal opportunity for career development.
- Keep informed of women's concerns at each work site. Provide a forum for the informal resolution of problems of particular concern to female employees.

Membership

The WLC shall include:

- One representative from each work area and each watch. The council should be comprised of individuals from all classifications utilized, e.g., medical, custody, trades, clerical, etc.
- Individuals interested in becoming WLC representatives for their work site shall submit a letter of interest and brief resume to the local WLC. A subsequent interview shall be conducted with the local WLC chairperson, co-chairperson, and the highest ranking administrator of the facility or their designee.
- The executive body of the WLC shall consist of a chairperson, co-chairperson, and recording secretary elected by the local WLC representatives.
  - The WLC chairperson shall act as the representative to the DWLC. Should a WLC chairperson be elected to the executive body of the DWLC, the local WLC co-chairperson shall assume the major responsibilities at the local facility.

All attempts shall be made to ensure that all local ethnic and occupational groups are represented.

Term of Office

Council members shall serve a 24-month term. Local WLC chairpersons will be selected on a staggered schedule to allow the selection of approximately one-fourth of the DWLC membership each six months. No member shall serve more than two consecutive terms.

The local WLC chairperson may not serve more than two consecutive terms.

31010.8.2.1 By-Laws

Local Women's Liaison Councils shall maintain and submit to the Women's Program Coordinator in the HRS by-laws approved by its respective Warden or RPA; the General Manager, PIA; or Chief Deputy Director. These by-laws shall outline roles, responsibilities, organizational structure, election procedures, terms of office, and other operational procedures as deemed necessary by the local Women's Liaison Council.

Additionally, by-laws shall outline amendment procedures; and when any amendments are made, an informational copy shall be forwarded to the Women's Program Coordinator in the HRS.

Meetings

The WLC representatives shall meet monthly and as called by the administrator. A general meeting open to all personnel will be held at least quarterly. Meetings shall be conducted by the elected chairperson. To ensure that the membership of the DWLC does not have more than one-fourth turnover at any one time, elections for WLC chairperson shall be staggered as follows:

Jan.:	CCC, CCI, CIM, CIW, CMF, Region I.
April:	CRC, Central Office, CMC, ASP, FSP, Region II.
July:	COR, CVSP, SQ, CTF, DVI, Region III, PIA.
Oct.:	MCSP, NCWF, RJD, SCC, Region IV, PBSP.

WLC representatives shall be allowed up to four hours of work time per week, as needed, to carry out their responsibilities as WLC representatives. The local WLC chairperson shall be allowed an additional four hours per week, as necessary, to carry out the responsibilities as DWLC representative.

31010.9 Disabled Persons Program

The Disabled Persons Program shall:

- Ensure that the Department is in compliance with state and federal mandates prohibiting discrimination against a disabled person.
- Provide a basis for implementing affirmative action for qualified disabled persons as members of the protected group.
- Ensure that employment of disabled individuals is based on the qualifications of the job with reasonable accommodation to the individual's impairment.

31010.9.1 Reasonable Accommodation

The Department shall make reasonable accommodations to the known physical or mental limitations of qualified disabled applicants and employees, including persons who become disabled while employed with the Department. Alternative job placement shall be included within the scope of reasonable accommodation and, in most cases, can be accomplished within the employee's geographical work location.

All employees who incur disabling injuries or illness and wish to remain employed shall be provided with reasonable accommodation. This includes the necessary assistance and appropriate employment options to remain productive state employees. Alternative job placement will also be provided when appropriate and if a transfer is necessary, contacts with prospective hiring authorities shall be the responsibility of the local Reasonable Accommodation Coordinator (RAC) (who is usually the AA Coordinator).

The HRS (headquarters) is available to assist the RAC's as needed by providing job opportunity information contained in the most recent Job Opportunity Bulletin.

The Department shall not deny any employment opportunity to a qualified disabled applicant or employee, if the basis for the denial is the need to make reasonable accommodation to the physical or mental limitations of the applicant or employee, unless it can be demonstrated that the accommodation would impose an undue hardship on the operations of its program.

Undue hardship is the only basis for refusing to provide reasonable accommodation to a person. The factors to be considered in determining whether an accommodation would impose an undue hardship are:

- The overall size of the program or agency with respect to the number of employees, number and type of facilities, and size of budget.
- The type of agency operation, including the composition and structure of the agency's work force.

Disabled state employees are a valued resource which should be utilized. Employees who are unable to perform the essential functions of their current position because of a disabling condition should not be encouraged to separate from state service until all possible alternatives for retention have been explored.

In accordance with GC 19253.5(d) an employer may only terminate an employee for medical reasons if it concludes that the employee is unable to perform the work of their present position, or any other position in the Department.

The Department has trained reasonable accommodation coordinators and return-to-work coordinators who are sensitive to the needs of the disabled, knowledgeable about options available to assist the employees who become disabled, and who are motivated to do all that is possible to retain disabled individuals.

31010.9.2 Accommodation Requests

Employees may request reasonable accommodation by submitting a written request on CDC Form 855, Request for Reasonable Accommodation to their immediate supervisor. This request shall include:

- The specific accommodation requested.
- The justification of need, including the doctor's statements if necessary.
- The name(s) of vendor(s) who could provide the requested accommodation.
- Costs.
- Statement of how the requested accommodation will assist the employee in performing their duties.

31010.9.2.1 Case Evaluation

Supervisors shall evaluate the need for reasonable accommodation on a case-by-case basis. The value and nature of an accommodation may be clarified by considering the following questions:

- Is the accommodation necessary for satisfactory performance of the essential functions of the position?
- What effect would the accommodation have on the agency's operations and on the employee's performance?
- To what extent does the accommodation compensate for the disabled person's limitations?
- Would the accommodation give the disabled person the opportunity to function or compete on a more equal basis with coworkers?
- Are there other alternatives that would accomplish the same purpose?

31010.9.2.2 Supervisory Response

The response sequence to reasonable accommodation request process is:

- Immediate supervisor - reviews and evaluates the request and makes recommendation.
- Business manager/fiscal officer - reviews and indicates estimates/cost for providing request.
- Affirmative Action (AA) Coordinator - reviews to determine if all possible appropriate accommodations were explored. Local AA Coordinators are to forward a copy of all approved and denied Reasonable Accommodation Requests (RAR) to the Chief, HRS.
- Hiring Authority - first review for approval/denial or modification.

Supervisors shall complete all actions related to reasonable accommodation requests in accordance with instructions on CDC Form 855, Reasonable Accommodation Request's; so, the ten day response time, which includes the hiring authority responding, doesn't elapse. The ten working days start the day the request is filed.

Due to the 10-day time limitation for responding to an RAR, institution and parole region supervisors are expected to contact the HRS by telephone for review. With AA review of the RAR prior to the supervisor's approval consistency and continuity shall be accomplished.

Supervisors shall, prior to approving reasonable accommodation requests in excess of $500., contact the Chief, Human Relation Section for review.

Contact the Disabled Persons Program Coordinator in the HRS before denying any request for reasonable accommodation.

31010.9.2.3 Appeals

If a reasonable accommodation request is denied or if ten working days have elapsed since the date of the request, the employee may file an appeal to the SPB, Appeals Division.

31010.9.3 DAC

Functions

DAC shall provide advice and assistance to the Director on issues related to disabled employees, such as:

- The development, implementation, and maintenance of EEO and Affirmative Action programs and activities for persons with disabilities.
- Projects to improve the personnel practices and employment opportunities for disabled persons.
- Liaison with groups and organizations that are concerned with achieving equitable representation and utilization of disabled persons in the Department's work force.
- Monitoring of issues concerning the committee to ensure that necessary actions occur within reasonable time frames.

31010.9.3.1 Membership

The committee shall consist of one representative and one alternate from each institution, each parole region, PIA, and Central Office. Representatives shall be selected by the appropriate hiring authority.

31010.9.3.2 Resources

Members of the committee shall be primarily involved with the duties and responsibilities of their specific assignments; local administrators shall make the necessary arrangements to permit members an average of four hours a week, as needed, in which to perform committee activities.

31010.9.3.3 Meetings

The committee shall meet as called by DAC Chairperson, and at least annually with the Director.

31010.10 Upward Mobility Program

This program provides career opportunities within the Department for permanent, full-time employees in lower paying classifications with a demonstrated interest and ability to advance to their highest potential.

31010.10.1 How to Participate

An employee who wishes to participate in the departmental Upward Mobility Program shall:

- Complete CDC Form 915, Upward Mobility Career Plan.
    - Make a self assessment of eligibility, interests, skills, and abilities.
    - Determine career options and desires.
    - Discuss career goals with supervisor.

Supervisors

Shall be responsible for:

- Encouraging eligible employees to investigate opportunities for promotion or transfer by upward mobility means.
- Keeping employees apprised of upward mobility opportunities.
- Reviewing an employee's Upward Mobility Plan as part of their annual performance evaluation.

HRS

Shall be responsible for:

- Working with management and the personnel section in identifying and developing upward mobility opportunities within the Department.
- Developing, assisting and monitoring the implementation of program objectives that will improve present working conditions and upward mobility career development for employees in lower paying classifications within the Department.
- Making recommendations to personnel in the development of bridging classifications from clerical to professional technical classifications.
- Providing assistance to interested employees having an approved Upward Mobility Plan, CDC Form 915, on file with job opportunity information.

31010.11 Affirmative Action Report of Appointment

The HRS shall track good faith efforts in the employee selection process by collection of specific information on the CDC Form 973, Affirmative Action Report of Appointment. This form shall be completed by the hiring authority after final selection to appoint is made and shall be submitted to the HRS which shall evaluate, analyze, and report on the data collected through use of this form.

31010.11.1 Data Gathering

The HRS shall monitor:

- All appointments made at Central Office (including satellite offices) to any job classification.
- Appointments made at institutions and parole regions at the Captain and PA-III (and equivalent) level and above.

31010.11.2 Documentation

When the anticipated appointment does not contribute toward affirmative action goals of the Department, the hiring authority shall document all attempts to initiate good faith efforts and show how this appointment would benefit the overall operation of the Department.

31010.12 Discrimination Complaint

The Department's discrimination complaint process provides a uniform method to present, to assure prompt and impartial consideration of, and to resolve complaints that allege discrimination in departmental employment practices covering recruitment, selection, appointment, compensation, transfer, training, and other terms and conditions of employment. This process pertains to complaints which allege discrimination on the basis of:

- Race.
- Color.
- Religious beliefs/affiliation.
- National origin.
- Ancestry.
- Age.
- Sex.
- Physical or mental disability.
- Marital affiliation.
- Having filed a previous complaint.
- AIDS.
- Political beliefs.
- Medical conditions (cancer).
- Creed.

31010.12.1 Who May File

Any applicant for employment, visitors on property maintained by the Department, and all employees of the Department may file a discrimination complaint upon becoming aware of discriminatory materials or practices by the Department.

The establishment of this process does not diminish the Department's continuing cooperation with state and federal compliance agencies in attempts to resolve discrimination complaints.

All issues arising in this area may be appealed to a higher jurisdiction. No attempt is made to exclude the right of employees, and job applicants, to file a complaint with:

- The SPB.
- California Department of Fair Employment and Housing (DFEH).
- The U.S.Equal Employment Opportunity Commission (EEOC).
- An action in court.
- U.S. Department of Labor Relations.

The process is intended to address complaints at the lowest possible organization level, while assuring that each complaint receives full consideration and applicable resolution.

31010.12.2 Separation From Grievance Procedures

This process does not apply to employee labor relations grievances which shall be processed through the employee grievance procedures.

Employees who feel their issues are both labor relations and EEO related shall not use both the grievance procedures and the discrimination complaint process. A careful assessment shall be made to determine if the expressed concern is a grievance or a discrimination complaint. Employees may consult with either the

Program Manager, Discrimination Complaint Unit, or the Labor Relations Section prior to deciding whether an unclear issue is a grievance or discrimination complaint.

31010.12.3 Discrimination Complaint Process

Revised November 2, 1990

EEO Counselor

Employees who believe they have been discriminated against may discuss the matter with an EEO counselor within one year of the date of the alleged discriminatory action or became aware of the discriminatory action.

Informal Assessment

EEO Counselor shall hear the complaint, conduct an inquiry and attempt to seek informal resolution of the complaint within 20 working days of the initial contact. Complete CDC form 693, EEO Counseling Report.

Formal Complaint

If the complainant is not satisfied with the results of the informal counseling stage, the complainant may file a formal charge of discrimination with the Program Manager, Discrimination Complaint Unit, within one year of the alleged discriminatory action (GC 12960). No complaint may be filed after the expiration of one year from the date upon which the alleged unlawful practice or refusal to cooperate occurred; except that this period may be extended for an additional 90 days following the expiration of that year, if a person allegedly aggrieved by an unlawful practice first obtained knowledge of the facts of the alleged unlawful practice after the expiration of one year form the date of their occurrence. However, the complainant shall provide evidence of not having knowledge of an unlawful, discriminatory act before the one year expiration date. Complete CDC Form 694, Discrimination Complaint Process Interview Record.

Discrimination Complaint Investigation Assignment

The Program Manager, Discrimination Complaint Unit, reviews the complaint and any related material provided, and determines whether an investigation is warranted.

Fact Finding Investigation

If assigned, the discrimination complaint investigator shall conduct a fact finding inquiry of the allegations and prepare a report of investigation and finding. The report is issued to the Program Manager, Discrimination Complaint Unit, for review.

Departmental Decision

The Program Manager, Discrimination Complaint Unit, provides a recommendation to the Assistant Director, Affirmative Action who determines whether discrimination has occurred based on the report of investigation and findings. The decision shall be provided to the complainant. However, at the discretion of the Program Manager, Discrimination Complaint Unit, a copy or portion thereof of the report my be provided to the complainant.

Appeal

If not satisfied with the Department’s decision, complainant may file an appeal within 30 days from receipt of the decision to the Appeals Division, SPB.

31010.12.4 Informal Complaints

Those who believe they have been discriminated against may seek redress by first discussing the problem or issues with the EEO counselor designated to handle complaints informally at that location. The EEO counselor shall conduct any inquiry and shall attempt an informal resolution of the complaint.

In attempts to resolve the matter, the EEO counselor shall attempt to keep the complainant's name confidential, if the complainant so desires, but confidentiality cannot be guaranteed.

If the complainant is not satisfied with the result of the investigation and chooses to formalize the complaint, the EEO counselor shall advise the complainant of all rights and procedures for filing a formal complaint.

31010.12.5 Formal Complaint

Anyone may file a formal written discrimination complaint with the Program Manager, Discrimination Complaint Unit. A discrimination complaint investigator may be assigned to conduct a fact-finding investigation of the allegations and prepare a report of investigation and findings. The Assistant Director, Affirmative Action, shall make the final departmental decision on the complaint as to whether or not an act of discrimination has occurred.

31010.12.6 Employee Rights

All employees have the following rights with regard to discrimination complaints:

- To use a reasonable amount of work time to make an informal presentation of their complaint to an EEO counselor. Consistent with the immediate needs of the Department, this right shall in no way be abridged, or its execution delayed, by any departmental employee.
- To keep their complaint confidential until:
  - They give the EEO counselor permission to do otherwise in order to bring the complaint to the appropriate authority for resolution.
  - A formal charge is filed with the Program Manager, Discrimination Complaint Unit.
  - It is determined that further action must be taken by appropriate managers/supervisors.
- To receive a full, impartial, and prompt investigation if the Program Manager, Discrimination Complaint Unit, decides it is warranted.
- To be assisted by a representative of their own choosing at each step of the process.
- To be free from restraint, interference, coercion or reprisal.
- To withdraw their charge of discrimination at any step in the process.
- To amend their discrimination complaint at any stage of the process only if the information could not have been available at any earlier stage of the complaint.
- To appeal the Department's decision to the SPB.
- To file charges with other appropriate state or federal compliance agencies.
- To file a civil action in the appropriate court.

31010.13 Revision

The Assistant Director, Equal Employment Opportunity, or designee, shall ensure that the content of this section is accurate and current.

31010.14 References

National

United States Constitution, 14th Amendment.

Civil Rights Acts of 1966, 1970, 1971.

Presidential Executive Orders 11246 (amended by Executive Order 11375), 11478 and 11757.

Title VII of the Civil Rights Act of 1964 (amended in 1973).

Equal Pay Act of 1964 (amended in 1972).

§§ 503 and 504 of the Vocational Rehabilitation Act of 1973.

ACA Standards 2-4054, 2-4056, 2-4057, 2-4058, 2-4067.

State

California Fair Employment Practices Act of 1959.

GC §§ 19790 - 19795; 19230 - 19237; 19400 - 19406

Governor's Executive Orders B54-79 and B65-80.

ARTICLE 2 — HEALTH AND SAFETY PROGRAM

Effective February 6, 1990

31020.1 Policy

The Director hereby establishes a health, safety, accident prevention and reporting system to prevent and correct safety and health hazards to its employees, inmates and visitors.

The Department shall strive to provide a healthy environment and safe working conditions, therefore:

- All personnel and inmates of the Department are responsible for the safety of themselves and others.
- Safety considerations shall take precedence over convenience and expediency in the Department's operations.
- Accident prevention and safety are basic management responsibilities:
  - Supervisors shall be evaluated on the effectiveness of their safety efforts.
  - Employees shall also be evaluated on their adherence to safety rules and safe practices.
- Specific annual health sanitation and fire safety inspections shall be performed in accordance with applicable laws and with the assistance of the State Fire Marshal's Office or DHS' sanitation engineer. Follow-up inspections to audit for correction of identified deficiencies shall be performed.

31020.2 Purpose

This section specifies the requirements for establishment, reporting and control of the health and safety management program.

31020.3 Objectives

All systems shall meet or exceed the minimum safety and health standards of the General Industry Safety Orders (GISO), CCR (8); Manual of Standards for Adult Correctional Institutions (ACA); National Fire Protection Association (NFPA) Life Safety Codes; H&SC; and all other applicable federal, state, and local laws, ordinances, and codes regarding occupational safety, environmental health, and fire prevention and control.

Each division head shall maintain a place of employment free from recognized hazards that cause, or are likely to cause, injury/illness or death to employees, inmates and visitors.

All personnel shall be aware of, and have access to, the appropriate manuals and training required to perform assignments in a healthful and safe manner.

31020.4 Definitions

Unless otherwise specifically indicated, the terms used in this section are defined as follows:

Accident

Deviation from planned events which causes an undesirable end result or effect.

Assigned Work or Employment of Inmates

Work performed in any pay or non-pay position in a work program under the direction, and with the approval of a duly authorized supervisory lead person or departmental employee. It does not include skill centers, vocational training, or academic education programs (except for physical fitness training and forestry training which are a prerequisite to fire suppression duties and are authorized by LC 3365) or activities which are clearly not encompassed within the duties and responsibilities of the position to which assigned.

Disabling Injury/ Illness

An injury or illness resulting in either lost workdays beyond the day of injury, loss of consciousness, restriction of motion, termination of employment or transfer to another job.

Employee

Every person in the service of an employer under any appointment or contract of hire or apprenticeship, expressed or implied oral or written, whether lawfully or unlawfully employed.

Employment

The carrying on of any trade, enterprise, project, industry, business, occupation, or work including construction, in which any person is engaged or permitted to work for hire, except household domestic service.

First Aid

Any one-time and any follow-up visit for the purpose of observation of minor scratches, cuts, burns, splinters, etc., which do not ordinarily require medical care. Such one-time treatment and follow-up visit for the purpose of observation is considered first-aid even though provided by a physician or registered professional personnel.

- Procedures such as tetanus injections and diagnostic x-rays are not, in and of themselves, considered medical treatment. Where an injured person has received an x-ray but the x-ray indicates no fracture and the employee receives no further treatment (or prescriptions), the x-ray itself is not considered medical treatment.
- Employees who are treated by a private physician rather than an institution doctor shall have an Employer's Report of Occupational Injury or Illness, SCIF Form 3067, completed and submitted even if the treatment is only first-aid.

A term used to identify the number of disabling injuries/illnesses by a specified unit, department, or institution. It is calculated by multiplying the number of injuries, illnesses and deaths by 200,000 divided by the total number of hours worked by all employees in that unit during the calendar year.

Health and Safety

Freedom from danger to the life and well-being of staff, inmates and visitors as the nature of the employment and environment reasonably permits.

Industrial Injury

Any injury or disease which arises out of the assigned work which may be either specific or cumulative.

- A specific injury or illness is one that occurs as the result of one incident or exposure.
- A cumulative injury or illness occurs over a period of time.

Inmate

A person committed to the custody of the Department who:

- Is in a facility, camp, hospital, or institution of the Department for the purpose of confinement, treatment, employment, training, or discipline.
- Has been temporarily released from a facility under jurisdiction of the Department, with or without custody, for the performance of assigned work.
- Is not an escapee or parolee.

Medical Treatment

Treatment administered by a physician or registered professional practitioner under the standing orders of a physician. Medical treatment does not include first-aid treatment even though provided by a physician or registered professional practitioner.

Personnel and Staff

Any non-incarcerated person employed by the Department and/or working under the jurisdiction thereof.

Personal Physician

An employee's regular physician and/or surgeon, licensed pursuant to Chapter 5 (commencing with § 2000, Personal Physician, Division 2, Business and Professionals Code), who has previously directed the medical treatment of the employee, and who retains the employee's medical records and medical history.

Physician

Any physician, surgeon, psychiatrist, optometrist, podiatrist, osteopathic, and chiropractic practitioner licensed by the State of California to practice within the scope of that license as defined by California statutes.

Place of Employment

Any place within the jurisdiction of the State of California and the Department.

Qualified Injured Worker

An employee, whose injury, whether or not combined with the effects of a prior injury or disability, permanently precludes, or is likely to preclude the employee from returning to their usual and customary occupation or position in which they were engaged at the time of injury; and who can reasonably be expected to return to suitable gainful employment through the provision of vocational rehabilitation services.

Qualified Rehabilitation Representative

A person capable of developing and implementing a plan submitted pursuant to 10006 of the Rules and Qualified Regulations of the Administrative Directive, Division Rehabilitation of Industrial Accidents. Such a person may be either a Representative vocational rehabilitation consultant employed by a state, public, or private agency, or an agent of the employer or employee whose experience and regular duties involve the evaluation, counseling and placement of disabled persons.

Recordable Occupational Injuries or Illnesses

Any occupational injuries or illnesses which result in:

- Occupational fatalities, regardless of the time between injury or death, or the length of the illness (No recording is required for fatalities occurring after a termination of employment).
- Occupational Illnesses
- Occupational injuries which involve one or more of the following:
    - Lost workdays (beyond the date of injury).
    - Loss of consciousness.
    - Restriction of work or motion.
    - Termination of employment.
    - Transfer to another job.
    - Medical treatment (other than first-aid).

Serious Injury/ Illness

Any injury or illness occurring in a place of employment or in connection with any employment which requires either inpatient hospitalization for a period in excess of 24 hours for other than observation, or in which an employee suffers loss of any member of the body, or any serious disfigurement. Serious injury or illness shall not include any injury, illness or death caused by the commission of a Penal Code violation, except the violation of PC 385, or an accident on a public street or highway.

Severity Rate

A rate calculated by multiplying the number of days lost times 200,000, divided by the total hours worked by all employees during the calendar year. This indicates the average length of workdays lost due to the injury/illness.

Supervisor

Any individual who has direction or control over another employee.

Vocational Rehabilitation Services

Services reasonably necessary to restore a qualified injured worker to suitable, gainful employment. Such services may include, but not be limited to, vocational evaluation, counseling, retraining (including On-the-job Training [OJT] for alternative employment with the same employer), and job placement assistance.

31020.5 General Responsibility

Departmental Responsibility

Departmental headquarters and each institution/region shall have staff support capability which is well versed in accident prevention, safety techniques, and departmental loss control practices to support and guide management responsibility in accident prevention and safety efforts.

31020.5.1 Hiring Authority's Responsibility

Each hiring authority shall monitor the overall health and safety program within their jurisdiction and shall adopt, furnish and use those means, methods, practices, and operations adequate to foster safe employment and living conditions for employees and inmates. They shall:

- Appoint a local safety coordinator who reports directly to the Warden or RPA in all matters of safety and health, including fire safety.

Paroles

In Paroles, the regional safety coordinator shall be the staff services analyst. However, district administrators, community based correctional center administrators, reentry coordinators, and the deputy RPA for region headquarters, shall administer the health and safety program in their respective areas of assigned responsibility.

Institutions

In institutions, a safety coordinator (e.g., the institutional fire chief) and an RTWC (e.g., the Business Manager II) shall be appointed.

The name and occupational title of the local safety coordinator shall be transmitted to the departmental coordinator each time a change occurs.

Provide the local safety coordinator with training in safety, health and fire safety.

Inspections

- Annual sanitation inspections and environmental health surveys shall be conducted by a DHS' sanitation engineer.
- Annual fire safety inspections shall be conducted by the State Fire Marshal.

Ensure that pertinent information on worker's compensation and rehabilitative programs are provided to injured employees or inmates.

31020.5.1.1 Hiring Authority's Mandatory Notifications Responsibility

Ensure posting of the following mandatory notices at locations in each work place accessible by all employees:

- STD Form 621, Notice to State Employees.
- Safety and Health Protection on the Job provides notice of employee protections and entitlements.
- CAL-OSHA Form S-11, Access to Medical and Exposure Records, shall be posted at a location in each work place, inmate law library, all entrance gates, and other locations accessible for review by all inmates/employees .
- Ensure that all personnel are aware of, and have access to, the manuals and training required to perform their job assignments in a healthful and safe manner.
- Appoint and maintain an active local safety committee represented by the lead supervisor and an alternate from each major interest and/or work area involved in the institution/region.
- Ensure that each division head maintains a place of employment free from recognized hazards that cause, or are likely to cause, injuries/illnesses or death to employees and inmates.

Compliance

- Ensure compliance and cooperation with applicable federal, state, departmental, and institution/region/division laws, codes, policies, standards, and procedures regarding healthful and safe operations.
- Through periodic inspections, the hiring authority shall confirm acceptable health and safety standards, or
  - Implement corrective action.
- CAL-OSHA Form 200, Log and Summary of Occupational Injuries and Illnesses (final summary page only). Post in a conspicuous place from February 1 to March 1 annually .
- Department of Occupational Safety and Health citations issued under LC 6317 shall be posted at, or near, each location where a violation referred to in the notice occurred.
- Minutes from the institution's monthly Safety Meeting.

31020.5.2 Departmental Health and Safety Officer's Responsibility

The Departmental Health and Safety Officer acts under the direction of the Chief, Personnel, Health and Safety, and shall:

- Provide overall coordination and implementation of the Department's safety and health programs, as follows:
  - Act as the chief consultant for all accident prevention loss control and employee safety matters in the Department and with other governmental entities.
  - Represent the Department in all interagency affairs dealing with health and safety matters.
  - Develop, implement, and monitor programs to reduce industrial injuries/illnesses and related compensation costs.
  - Develop, implement, and monitor programs to reduce industrial injuries/illnesses and related compensation costs.
  - Evaluate performance and set goals/guidelines regarding safety issues for the Department.
  - Develop progressive safety, environmental health and fire prevention programs.

- Provide resource information, including training when required or requested, using departmental resources, the Office of Insurance and Risk Management and the State Fire Marshal, for the following areas:

Programs

- Occupational safety and health standards.
- Fire safety/prevention programs.
- Workers' Compensation benefits/Enhanced Industrial Disability Leave (EIDL) and Industrial Disability Leave (IDL).
- Accident prevention programs and accident investigation.
- EAP.
- The Return-to-Work Program.
- Temporary duty assignments for medically restricted staff.
- Non-Industrial Disability Insurance benefits.
- The Safety Award Program.
- The Employee Post-Trauma Program.
- Control of hazardous, flammable, toxic and volatile substances.
- Environmental health.

Enforcement

- Assist with the enforcement of safety laws and departmental policies, if supervision fails to carry out its assigned obligations. This authority includes the ability to order work stopped when any activity or object in that work area represents a potential for serious injury or illness to employees or inmates.
- Report, in writing, to the appropriate management all accident prevention opportunities and safety deficiencies discovered with recommendations for appropriate corrective action.

31020.5.3 Supervisor's Responsibility

All departmental supervisors are responsible and accountable for safety performance in their respective areas of responsibility.

Supervisors shall be evaluated on the effectiveness of their safety efforts and shall:

- Instruct employees on the proper safety equipment and personal protective clothing to be used in their particular work assignment.
- Provide all employees updated health and safety training annually on all changes in laws, ordinances, departmental policies or procedures as related to their specific duty assignments.
    - Conduct discussions of safety issues with employees or inmate/parolee workers under their supervision. The length and frequency of these safety meetings shall be commensurate with the hazards of the particular assignment. These meetings shall be properly documented as to time, date, content, names of participants, etc.
    - Institution supervisors shall meet with employees a minimum of once a month.
    - Supervisors of construction-type assignments shall have weekly safety meetings of at least 10 minutes.
- Provide safety orientation to new employees prior to job assignment, particularly new employees who will be driving a vehicle on State business.

Verifications

- Confirm the validity of the employees' operator's license.
- Confirm the provision of defensive driving instruction at least every four years.
- Brief employees on employee protection plans.
- Evaluate and document on the employee's performance report, the employee's adherence to safety rules and practices.
- Ensure that appropriate disciplinary action is taken when an employee or inmate worker does not abide by the applicable safety regulations and practices.

Inspections

- Conduct thorough, comprehensive inspections:
    - Daily informal safety inspections of work area for any hazard which may pose potential injury or illness to employees or others.
    - Formal weekly safety inspections of all areas using hazard checklist for grounds and for buildings .

All areas shall be inspected weekly by a supervisor trained in fire and life safety precautions. Supervisors shall <u>not</u> inspect their own areas of operation but shall trade areas with another trained supervisor in order to provide unbiased inspections.

- Monthly/quarterly safety and sanitation inspections. Findings shall be documented with deficiencies noted.

Health and sanitation inspections shall be performed by a qualified departmental staff member trained in the application of jurisdictional codes and regulations.

- Enforce rules, laws, and procedures concerning health and safety.
    - Become familiar with departmental policies and operational procedures regarding the specific work area being supervised.
- Report, as quickly as possible, any unsafe or unhealthful condition.

Documentation

Take immediate action to correct deficiencies. If immediate correction is not possible, a statement shall be prepared indicating what is needed and a date of expected completion. Copies shall be forwarded to the next line supervisor, the safety coordinator, and other appropriate personnel who may be involved in the correction. The supervisor preparing the documentation report should maintain a copy for their records.

Injury Report

In case of work-related employee injury or illness, complete the Supervisor's Report of Injury or Illness (STD Form 620) within 24 hours.

If the employee believes the injury/illness was caused or aggravated by the employment, then the Employer's Report of Occupational Injury (SCIF Form 3067) shall also be completed.

- Ensure that each employee, inmate, or parolee is advised of the safety requirements of the job, including the duties to be performed, the procedures to be followed, and the hazards present in performing the job.
- Ensure that the proper equipment and all safety devices are correctly installed, operative, and properly used.

31020.5.4 Employee's Responsibility

All employees shall:

- Follow accident prevention rules and regulations, departmental policies, institutional procedures, ordinances and laws, as required by their job assignment with particular attention to the following:
    - Disturbance control.
    - Emergency preparedness and employee protection.
    - Control of hazardous, toxic, and volatile substances.
    - Fire prevention and suppression.
    - Safety operational procedures.
    - Inspections.
    - Injury reporting.
    - Firearms, chemical agents, ammunition, and related equipment.
- Observe all safety signs, posters, etc.
- Use all safety devices, guards and equipment appropriate to the task assigned.
- Report any safety violation or unsafe condition to the supervisor, the local safety coordinator, or other designated person as quickly as possible.
- Take action to correct safety violations within their authority.
- Take definitive safety precautions.
- Immediately report any unsafe or unhealthy condition that cannot be readily remedied. Reports shall be made to the appropriate supervisor, with a copy of the report sent to the local safety coordinator.

If Injured

In case of injury or illness the employee shall:

- Report all accidents/incidents to the supervisor promptly, but no later than 24 hours after the injury/illness becomes known (SAM Section 2581.1). Failure to report the injury or illness promptly may result in delay and/or denial of benefits.
- Obtain first-aid for minor injuries or illnesses from the institution medical department and return to work as soon as medically feasible.

If unable to return to work following the first-aid treatment, or if further medical treatment is required or requested, the employee shall:

- Notify supervisor immediately.
- Accept examination and treatment by the physician and/or facility arranged by the Department as indicated on the Notice to Employees, STD Form 621 unless the employee has notified the Department in writing prior to the claimed injury or illness that they want to be treated by a personal physician. (See 31020.4 of this section for a definition of personal physician.)
- Keep the Department/supervisor informed of the physician's opinion concerning the employee's ability to work.
- Complete an Employee's Attendance Report, CDC Form 998, each month for time lost because of work injury/illness.

Every employee is responsible for their personal safety and the safety of others. This includes attending the appropriate training required to meet or exceed the departmental goals and objectives.

31020.5.5 Central Office/ Institution/Parole Region Safety Coordinator's Responsibility

The local safety coordinator shall:

- Develop and implement the local safety program.
- Ensure compliance with all safety regulations, codes, directives, and policies.
- In case of serious or imminent hazards to life or safety in any place of work within the institution/parole region/office, exercise the authority to shut down the hazardous job, work site, or area until adequate corrections are made.
- In conjunction with the safety committee, review operations to assure compliance with the departmental safety plan prepared by the Health and Safety Unit.
- Meet at least monthly with the Central Office institution/region Safety Committee and attend all departmental safety coordinator's conferences.
- Make regular, periodic on-site inspections of facilities, equipment, and devices to ensure that:
    - They are in safe operating condition.
    - Safety devices are in place and operative.
    - Safe operating procedures are being used.

    - Living areas are free of hazards.
- Report the inspection findings to the hiring authority.
- Make written recommendations to the hiring authority regarding the prevention/correction of possible, imminent, or present fire or life safety problems.
- Review all accident reports of employees and inmates to evaluate compliance with safety policies and procedures and make recommendations regarding preventive and/or corrective action and training needs.
- Work in cooperation with training staff to develop training programs in the areas of fire and life safety and ensure:
    - Provision of one hour of safety training to all new staff during orientation.
    - Presentation of safety classes through IST at regular intervals throughout the year.

31020.6. Health Management Program

The Health Management Program shall consist of the following sections.

31020.6.1 EAP

The Department shall provide assistance to all employees for the prevention and/or reduction of health and personal problems as they relate to job performance. It is in the best interest of the State to employ a fully productive work force that is in good physical and emotional health. Participation in the program does not jeopardize job security or promotional opportunities. Employees are expected to meet job performance standards, so participation does not supersede the grievance or disciplinary processes. Total confidentiality shall be observed.

Recognizing that personal problems, unique pressures, and stress can lead to inadequate job performance and cause further deterioration of the employee's self-esteem, the Department has established EAP.

EAP does not provide direct treatment to the employee or family member. EAP is contracted out to a private consulting firm for diagnostic and treatment counseling services. The consulting firm:

- Is a source of information and referral to independent assessment counseling.
- Identifies the nature of the problem, and
- Directs the employee or family member(s) to the treatment service best suited.

Services

This service is voluntary, personal, and confidential. All employees and their family members are eligible. The information and referral services include, but are not limited to, problems of alcoholism, drug dependency, marital, financial, social, legal, emotional, or interpersonal relationships.

Treatment

The counseling firm provides one-on-one diagnostic and treatment counseling services. Referrals to other training clinicians are also provided when needed.

Charges/Visits

There are no charges to the employee or dependents for the private assessment evaluation. The number of free visits for counseling of rank and file employees is determined by the bargaining unit to which each belongs. See the appropriate bargaining unit contract or EAP coordinator for details.

31020.6.1.1 Departmental EAP Manager's Responsibility

The departmental EAP manager is the Health and Safety Officer. The EAP manager shall:

- Provide assistance to EAP coordinators in the field and Central Office pertaining to specifications of the EAP contractor.
- Coordinate training when needed by the EAP contractor.
- Act as a liaison with other appropriate agencies.
- Monitor effectiveness of program through collection of statistics and other pertinent data obtained from the EAP contractor.
- Compile reports for dissemination to DPA and other control agencies.

31020.6.1.2 Central Office EAP Coordinator's Responsibility

The Central Office coordinator shall assist the EAP manager with responsibilities as stated in this chapter. The Central Office EAP coordinator has the same duties as a field EAP coordinator.

31020.6.1.3 Field EAP Coordinator's Responsibility

Under the appointment of the hiring authority, the field EAP coordinator shall:

- Coordinate and administer EAP within departmental guidelines and the needs of the EAP contractor. All problems pertaining to the EAP contract shall be referred to the EAP manager.
- Be a referral source for employees to reach the EAP practitioner.
- Make no attempt to diagnose the employee's or family member's problem but refer the employee to a counseling service trained in diagnosing and referral services.
- Make known to all employees the existence and services afforded under this program.
- Provide assistance and training to supervisory personnel in all aspects of the program.
- Ensure complete confidentiality of all information obtained from and about employees and their family members.

31020.6.1.4 Supervisor's Responsibility

Supervisors shall:

- Accomplish the work of a unit efficiently through the efforts and abilities of the employees directed.
    - Provide assessment of job performance and appropriate corrective action when necessary.

- Corrective action shall include an offer of assistance through EAP when the problem appears to be personal in nature.
- EAP is designed to relieve the supervisor of direct involvement in the employee's personal problems.

- Ensure employee performance and attendance expectations.

EAP Referral

- Give the name and phone number of the EAP coordinator to the employee in need.
  - Make sure the employee understands that participation in the program is voluntary and confidential.
  - Offer the use of the telephone for the employee to call the EAP coordinator.
- Document the date EAP was offered.

Use of State Time

- Allow State time off for an employee to consult with the EAP practitioner. If the employee accepts an EAP referral, allow the employee the time off required through the use of earned leave credits. This shall be documented on STD Form 998 as 'therapy" or "personal consultation".

Adjust the Work Assignment

- Adjust the employee's work assignment in order to facilitate completion of the initial diagnostic interview with the outside consultant, as well as any participation in the appropriate treatment/counseling programs prescribed for the employee.

Do Not Diagnose

- Refrain from attempts to diagnose the employee's personal problem(s).
  - Information received as a result of EAP referral shall not be placed in the employee's personnel record.
- Refrain from inquiry of the EAP coordinator or contracting agency on the status of the employee, e.g., whether or not the employee accepted the program and/or progress.

Reasonable Time for Improvement

Give the employee a reasonable amount of time to improve the deficiencies before taking adverse action, if such action is necessary. The supervisor shall review the employee's performance weekly and document appropriately.

Adverse Action

If an employee fails to respond with acceptable job performance within a reasonable length of time, or the performance continues to deteriorate, initiate adverse action. Participation in EAP does not supersede appropriate disciplinary action.

31020.6.1.5 Employee's Responsibility

The employee shall maintain satisfactory work performance and conduct on the job. The employee, when recognizing a need for assistance, may contact the EAP coordinator or referral/counseling agency before work performance is adversely affected.

- If these resources are not effective in helping the employee, further discussion and/or referral may be necessary.
- Acceptance of the service is voluntary.
- The employee shall make every attempt to arrange for EAP counseling/treatment outside of working hours.
- If the work performance is not corrected, adverse action may result.

The employee need not identify the exact nature of the problem to the EAP coordinator.

Rank and file employees should refer to their collective bargaining agreement for further details on EAP.

31020.6.1.6 EAP Contractor's Responsibility

EAP contract vendor shall:

- Provide services as required under the current contract.
- Provide the Department with the appropriate credentials of all of the licensed clinicians to whom departmental employees shall be referred.
- Provide quarterly and semi-annual reports on program activity giving pertinent statistical information to the departmental EAP manager.
- Operate a system of records on individuals in accordance with the Privacy Act of 1974, Public Law 93-579.

Confidentiality Limitations

- Maintain complete confidentiality regarding the identity, diagnosis, and treatment of any employee. Disclosure shall occur only under the following circumstances:
  - When authorized by written consent of the employee.
  - When records are subpoenaed.
  - Contractor shall advise the Department concerning any employee whose condition involves clear and imminent danger to the safety of others or of physical violence by the employee.

31020.6.2 Medical Termination/ Disability Retirement (Industrial and Non-Industrial)

Medical termination or disability retirement are proper steps to take in the event that all appropriate vacant positions in the Department have been evaluated and determined inappropriate or there are no vacancies in the Department and all other benefits have been exhausted.

Medical termination and disability retirement are administrative or voluntary actions which separate an employee who has incurred a disability/illness and/or is unable to perform the duties of any position in the Department.

31020.6.2.1 Immediate Supervisor's and/ or Employee's Responsibility

The employee and/or the immediate supervisor shall contact the local or departmental RTWC for assistance in initiating a medical termination or disability retirement.

31020.6.2.2 Local and/or Departmental Return-To-Work Coordinator's Responsibility

If existing documentation is insufficient for the appropriate action, the local or departmental RTWC shall arrange for a medical examination and report, cost to be paid by the Department. The appointing power may require an employee to submit to a medical examination to evaluate the capacity of the employee to perform the work of a position. [The local SCIF Office may be contacted for assistance in the selection of a physician.]

Documentation

Sufficient documentation may include one or more of the following:

- A medical report from the employee's doctor stating that the employee is not physically and/or mentally able to function in the current position or any other position.
- A statement from the employee that they are not physically and/or mentally able to function in the current position or any other position.
- A medical report from SCIF stating that the employee is not physically and/or mentally able to function in the current position or any other position.

PERS-BEN Form 369

For processing disability retirements, initiate the application for retirement, PERS-BEN Form 369, upon request from appointing power and/or employee, if eligible for disability retirement.

Advising the Affected Employee

Advise the employee that the treating physician shall receive a copy of the medical examiner's report.

Assist and counsel the employee as to the appropriate action to be taken if medical reports or the employee's own written statement indicate an inability to perform in the present position or any other position or the employee has declined an appropriate position(s) that was offered.

Advise the employee of appeal and reinstatement rights.

Retirement Eligibility Criteria

Work-Related Disability Retirement. No minimum service required for State safety members, five years of credited service required for industrial members.

Non-Work-Related Disability Retirement. Five years of credited service required by all members of PERS.

Forward the request, if initiated by the employee, to the appointing power for appropriate action with the following documents:

- A written recommendation for the approval of the request.
- All pertinent medical information.
- Employee statement, if one was submitted.
- Evidence that all mandatory options and benefits have been exhausted.

Upon approval of the appointing power, forward the completed PERS-BEN Form 369 to PERS.

For processing medical terminations of appointment, complete the Notice of Medical Termination upon request from appointing power. If the employee is ineligible for disability retirement or eligible but wants to waive the right to disability retirement and elects to withdraw retirement contributions or to allow the contributions to remain in the retirement fund with rights to service retirement in the future, the employee may do so. See Section 33030, Adverse Personnel Action, of this manual for information on service of the notice, and the administrative review process. Notify the local Personnel Transactions Office of proposed action.

31020.6.2.3 Hiring Authority's Responsibility

The hiring authority's responsibility is to approve disability retirement or medical termination, whichever is applicable, after considering the conclusions of the medical information and other pertinent information stating that employee is unable to perform the work of the present position or any other position in the Department.

Return approved action to the RTWC who initiated the action.

31020.6.2.4 Appeal and Reinstatement Rights

If terminated, the employee shall be given at least 15 days written notice prior to the effective date of the termination. If the employee wishes to appeal the termination decision to the SPB, that must be done within 15 days after receipt of the written termination notice.

Appeal Rights

If PERS disapproves an employee's request for disability retirement, the employee may file a written appeal with PERS in Sacramento within 30 days of the mailing of the disapproval notification. An appeal should set forth the factual basis and the legal authorizations for the appeal.

Reinstatement Rights

Reinstatement is considered upon request of an appointing authority or petition of the employee who was terminated. If it is determined by SPB that the employee is no longer incapacitated for duty, the employee shall be reinstated to an appropriate vacant position in:

- The same class, or
- A comparable class, or
- A lower rated class.

Such a reinstatement to a position in a different agency may be made only with the concurrence of that agency. In approving or ordering such reinstatements, the SPB may require the satisfactory completion of a new probationary period.

Re-Employment Lists

When the SPB finds the employee who was terminated, demoted, or transferred is no longer incapacitated for duty but there is no vacant position available, the name of the employee shall be placed upon such re-employment lists as are determined to be appropriate by the SPB.

31020.6.3 Non-Industrial Disability Insurance

State employees who meet eligibility requirements and become disabled because of a covered injury, illness or medical condition, including pregnancy may be eligible to receive Non-Industrial Disability Insurance (NDI) benefits.

NDI is a wage continuation program administered by the Employment Development Department.

Qualification

To qualify, a departmental employee must be a current active member of the PERS. An employee must be in “compensated employment” (in pay status and not separated by a formal leave of absence). All permanent part-time and full-time employees or probationary employees or state officers are covered under the program. Permanent part-time and permanent intermittent employees and state officers who have at least six monthly compensated pay periods of service in the 18 months immediately preceding the pay period in which the disability begins, may also be eligible for NDI benefits on a prorated basis.

Benefits and leave credits may vary according to designation and/or collective bargaining unit. For further details see bargaining unit contracts or DPA Rules 599.770 through 599.779.

31020.6.4 Employee Post Trauma Program (EPTP)

Revised October 4, 1994

Employee involvement in specific violent, work related situations may cause serious physical and/or emotional trauma to the employee.

Immediate intervention and counseling has been shown to alleviate many trauma-related problems and to help the employee remain fully productive.

To minimize the effect of trauma, EPTP shall provide immediate intervention care and counseling by coworkers and nondepartmental professionals.

- Physical assault of a serious nature.
- Sexual assault of a serious nature.
- Hostage incident.
- Causing serious injury/death to person(s).
- Direct involvement in critical incidents.

EPTP shall:

- Provide specific intervention services.
- Designate responsibilities and response times for post incident trauma care.
- Provide professional nondepartmental counseling services in a timely manner that meets the employee's needs.
- Return involved employees to duty as soon as possible.
- Train and inform all staff of the goals, operation and use of the program.

Intervention and Counseling Services

Professional, counseling services to assist employees in post trauma situations are provided by direct contract to the Department or under the provisions of SCIF program.

31020.6.4.1 Immediate Intervention

Revised October 4, 1994

Immediate intervention counseling should be available through SCIF. However, if it is not available through workers compensation, there is 24-hour-a-day immediate intervention counseling available through the departmental EAP. EAP shall only be utilized for immediate care and the employee will be seen thereafter by a workers compensation clinician. The caller shall:

- State they represent the Department and their call is of an emergency or crisis nature.
- Be connected immediately with a licensed clinician.

The clinician shall arrange for a personal visit with a post trauma specialist within four hours if need is indicated.

31020.6.4.2 Post-Incident Counseling

Revised October 4, 1994

Subsequent contact and steps shall be based on the needs of the employee and the professional judgment of the clinician.

A mandatory post incident counseling interview shall be conducted with a licensed clinician specializing in post trauma stress within three days of the incident, physical condition permitting. If not, the time shall be arranged by the EPTP coordinator according to circumstances. The employee shall:

- Be provided information regarding post trauma symptomatology.
- Participate in the assessment of their emotional status.

Recommendations for further assistance may be proposed.

The content of the interview is confidential; however, the clinician shall verify the fact of attendance to the Department and provide an assessment.

31020.6.4.3 Continued Care

Revised October 4, 1994

Continued psychological care is available on a voluntary basis through SCIF.

The employee may continue seeing the original clinician or may elect another mental health worker who meets the criteria as outlined in the program.

The specific program, time frames, cost coverage, etc., shall follow the guidelines established in the DOM 31020.7.5.1.

31020.6.4.4 Contracting for Services

Revised October 4, 1994

In addition to services provided by SCIF primary contractor, local administrators may maintain other immediate medical referral services.

A list of additional referral services shall be provided to the departmental EPTP coordinator including contact persons and telephone numbers. Contractors shall:

- Provide a documented background in employee/victim intervention and trauma care.
- Have the demonstrated capacity to diagnose and treat employee/victim post trauma disorders and, if necessary, refer the employee for additional treatment.
- Hold the appropriate current state license in their mental health specialty as required by the state.
- Meet the standards for response.
- Be familiar with law enforcement procedures, correctional settings and critical incident management.
- Participate in orientation/familiarization program at the institutions they shall be serving.
- Complete the Verification of Interview Attendance Form .

31020.6.4.5 Coordinator Designation

Revised October 4, 1994

The EPTP coordinators shall be designated as follows:

- Department and headquarters - health and safety officer.
- Facilities - Negotiations Management Team (NMT) leader.
- Facilities - Emergency Operations Unit (training only).
- Parole offices - Unit supervisor.

31020.6.4.6 Teams

Revised October 4, 1994

Each facility EPTP team shall be comprised of all NMT member and two or more staff (non-NMT) with appropriate interest and skills.

The headquarters' team shall include a staff member from each division.

Parole regions shall form their teams from unit supervisors (coordinators) or other designated staff members.

At management's discretion, more members can be added consistent with the size of the facility, parole region, division, or office.

The team shall have both male and female members.

31020.6.4.7 Administrative Responsibility

Revised October 4, 1994

Each Warden, RPA, and Deputy Director/Assistant Deputy Director shall:

- Ensure that a local EPTP program is available and used in the employee's and Department's best interests.
- Appoint an EPTP coordinator.
- Appoint an EPTP team.
- Ensure coordination between the EPTP, the RTW, and the EAP coordinators and other program resources.
- Ensure the EPTP coordinator and team receive appropriate training in the goals and procedures of the program.

31020.6.4.8 Departmental Coordinator Responsibility

Revised October 4, 1994

The Health and Safety Officer is the departmental EPTP coordinator and shall:

- Provide assistance to all EPTP coordinators in establishing and administering effective programs.
- Provide training for EPTP coordinators.
- Provide liaison with appropriate agencies.
- Coordinate with counseling agencies to monitor and establish more effective methods of working with employee trauma problems.
- Assist area RTWCs, committees, and management in the solution of trauma-related problems.
- Provide information about RTW options and employment opportunities available to staff involved in critical incidents.
- Provide the services of qualified rehabilitation representatives as requested.
- Ensure the system maintains strict confidentiality of the employee's personal information.
- Collect statistics and other pertinent data to monitor program effectiveness.
- Prepare an annual report summarizing the progress and effectiveness of the program.

31020.6.4.9 Supervisor's Responsibility

Revised October 4, 1994

In the event of a trauma causing incident the supervisor shall:

- Provide relief for the involved employee(s).
- Remove the employee from the incident area.
- Assign another staff member, preferably EPTP trained, to stay with the employee throughout the post trauma activities. At no time shall the employee be left alone.
- Notify the EPTP coordinator of the incident and the employee's apparent physical and emotional status.
- Notify the administration of the incident and that the EPTP coordinator is responding.
- Assist the EPTP coordinator as requested.
- Prepare the documentation required by DOM 31020.7.5 if the employee is injured or believes an injury/illness is the result of the incident.

31020.6.4.10 Local Coordinator's Responsibility

Revised October 4, 1994

The EPTP coordinator shall:

- Assist the WARDEN, RPA, and Deputy Director/Assistant Deputy Director in determining the composition of EPTP team.
- Help determine which members will respond to the location designated.
- Provide team members to conduct the critical debriefing of the employee involved for the purpose of:
  - Assisting the employee to understand the situation.
  - Providing information and assistance to meet the needs.
- Instruct team members to advise the employee that:
  - Information relating to their personal feelings shall be confidential.
  - If information relates to safety and security of the facility and may lead to adverse action they have a right to representation.
- Consult with the administration regarding potential services which may be provided to the employee.
- Ensure the employee is informed regarding medical referral programs, EAP, Workers' Compensation Benefits, and RTW program.
- Notify the administration immediately if professional intervention is requested or deemed appropriate. (Refer to DOM 31020.6.4.2.)
- Notify the RTWC of the incident.
- Schedule the employee for the mandatory counseling interview and ensure that the interview has been conducted.
- Contact the employee at least once after the initial debriefing if the employee is off work, or until contact is no longer needed if the employee is working.

The RTWC will assist the administration in:

  - Arrange special work assignments or time off.
  - Ensure follow-up care is provided and maintained.
- Evaluate the effectiveness of treatment services.

Debriefing

The debriefing shall be held as soon as possible and prior to the employee going off duty unless physically or medically infeasible.

If the EPTP coordinator is unavailable, a previously designated and trained team member shall assume the responsibilities.

A confirmation of assistance form shall be completed.

Information Packet

The employee shall be given a packet containing detailed information about:

- Psychological referral resources.
- EAP.
- The RTW Program.
- Listing of hospitals.
- Community resources including crisis intervention, rape counseling, hotline numbers, and support groups.

The pertinence of these services shall be explained.

31020.6.4.11 Employee Responsibility

Revised October 4, 1994

The employee shall:

- Leave the area where the incident occurred as directed by the supervisor.
- Participate in the critical incident debriefing with the EPTP coordinator/designee.
- Attend the post incident assessment session with a professional clinician.

If an employee feels that their injury or illness is work related and is preventing the employee from maintaining a satisfactory work performance, the employee shall:

- Notify their supervisor.

- Fill out the appropriate forms and documentation to initiate workers' compensation procedures.

31020.6.4.12 Post-Incident Assignment

Revised October 4, 1994

Assignments of every employee involved in trauma causing incidents shall be reviewed.

Employees in inmate contact positions shall be temporarily reassigned until:

- Completion of the mandatory counseling interview and review of the clinician's assessment.
- The situation is reviewed by the Warden, RPA, or Deputy Director/Assistant Deputy Director.

Other employees may be temporarily reassigned if it is in their or the Department's best interests.

Temporary reassignments shall have:

- Input from both the employee and the immediate supervisor.
- Approval of the Warden, RPA, or Deputy Director/Assistant Deputy Director.

31020.6.4.13 Time Off

Revised October 4, 1994

Time off shall:

- Be granted if the employee requests it or if it is determined to be in the best interests of the employee or the Department.
- Follow sick leave, compensatory-time-off, or vacation procedures.
- May be reimbursed under workers' compensation provisions to include IDL. (Refer to DOM 31020.7.5.1)

31020.6.4.14 Light Duty/Limited Term Assignments

Revised October 4, 1994

Temporary limited term special assignments may be made and shall be governed by Department and State rules and regulations.

31020.6.4.15 Return-to-Work

Revised October 4, 1994

The emphasis of the EPTP shall be upon returning the employee to duty in the shortest time possible.

Notwithstanding, the results of the mandatory counseling interview shall be considered in the reassignment process.

All alternatives provided by GC 19991.4 shall be followed where appropriate. The time frames and provisions of the RTW program shall be followed. (Refer to DOM 31020.7.6.)

31020.6.4.16 Employee Post Trauma Program Training

Revised October 4, 1994

The departmental EPTP coordinator shall ensure that:

- All managers and supervisors receive training in the administration of EPTP.
- EPTP coordinators for all units are designated and trained.

Each new employee shall be instructed regarding EPTP during the orientation at the local level.

The provisions of EPTP shall be included in the basic academy curriculum.

The Training Section shall coordinate with the Department EPTP coordinator to ensure that all employees receive information annually at the local level.

The facility/unit EPTP coordinator shall assist IST staff to:

- Train supervisory and management staff in operation of EPTP.
- Provide information of EPTP provisions and services to all employees.

31020.6.5 Blood Donations

A blood donation, a true "gift of life", is an act of generosity which can in no other way be duplicated. Without the generosity of volunteer donors, blood would not be available for thousands of patients who require blood because of illness, injury, or surgery.

Program

The Department encourages participation in blood donation programs for employees and their immediate family members.

- Each institution/region and headquarters shall establish blood donation programs. A staff person shall be appointed as the blood donation coordinator.

Reserve Account

Where there is an American Association of Blood Banks (AABB) Office, a reserve account shall be established. In all other geographic areas, the American Red Cross is available. While it does not establish reserve accounts, a blood donation program shall be established.

All requests for withdrawals from a reserve account shall be handled on a "first come, first approved" basis.

Time Off

The Department allows up to two hours off for regular donors when back-up coverage is not required. For special donation programs such as Pheresis, actual donation time plus up to 30 minutes travel time may be approved.

Supervisors retain approving authority for granting time off for blood donations. Time off shall not be approved where back-up coverage is required.

31020.6.5.1 Central Office Blood Drive

The Chief of the Health and Safety Unit is the blood donation coordinator for Central Office.

Working with the local AABB Office, Central Office shall sponsor a blood drive three times a year to establish a reserve account for employees of Central Office and their immediate family members.

Withdrawal Requests

The Chief of the Health and Safety Unit or designee shall approve withdrawal requests from the reserve account.

31020.7 Safety Management Program

Each institution's safety plan shall ensure that all work and living areas are safe from life-endangering conditions and comply with departmental guidelines by a general safety plan.

Parole and Central Office facilities shall submit only the Employee Protection Plan which shall be titled "Emergency Preparedness Employee Protection." Two copies shall be submitted to the appropriate deputy director (either for P&CSD or ASD) for review and forwarding to the CHP.

31020.7.1 Central Office/ Institution/Parole Region Safety Committee

The safety committee is the vehicle by which the routine day-to-day health and safety issues (i.e., life safety, procedures, accident reports) are raised, and, where possible, resolved.

31020.7.1.1 Membership

Central Office/ Institutions

Central Office or institution membership may be represented through, but not limited to the following listed areas, by a representative or designee. The committee shall consist of at least fifteen members representing a large cross-section of the work force. When a committee vote is required, a simple majority vote of those present shall be necessary.

- Fire Chief.
- Business Services.
- Custody.
- Food Services.
- PIA.
- Maintenance.
- Medical.
- Education.
- Exclusive bargaining agents.
- IST officer.
- ACA Coordinator.
- Employee Relations Officer (ERO).
- Records.
- Forestry training representative.

Paroles

In Paroles, the members shall consist of the following positions or designees:

- Regional Administrator (chairperson).
- Deputy Regional Administrator (vice chairperson).
- Assistant Regional Administrator.
- Three PAs representing the major functional interest and/or geographic areas.
- A community based correctional center administrator.
- Reentry coordinator.
- Training coordinator.
- Regional safety coordinator.

Each hiring authority shall submit to the Departmental Health and Safety Officer by January 1 of each year, a roster of the organization and membership by occupational title of the committee.

31020.7.1.2 Meetings

The safety committee shall meet at least monthly with the local safety coordinator. Meetings may be held more frequently where circumstances dictate or to deal with specific conditions or situations.

Minutes shall be kept of monthly meetings and copies transmitted to the Departmental Health and Safety Officer and the other institution/parole region safety committees.

31020.7.1.3 Responsibility

Safety committees shall:

- Formulate recommended courses of action to resolve or prevent safety violations.

- In conjunction with the local safety coordinator, develop recommendations for deviations from the standards established in this section as a result of unique local needs.
- Ensure that regular, periodic on-site inspections of the facilities, equipment, and operational procedures are made as required and that the findings are reported to the hiring authority.
- Investigate complaints of a serious or sensitive nature regarding hazardous conditions or unsafe practices upon referral by the local safety coordinator.
- Assist in development of safety plan and review plan annually making recommendations to the local safety coordinator.

31020.7.2 Color Code And Markings for Equipment, Fixtures, And Buildings

The color code shown below shall be used throughout the Department for fire protection and accident prevention.

The painting of institutional buildings and facilities, other than those specifically enumerated in this section, shall not be affected by this code.

Red (Fire Protection)

To mark instruments for combating fire. Storage spaces or cabinets for fire extinguishers, fire hose, fire blankets, standpipes.

- Equipment: Alarm stations, sprinkler systems (except sprinkler heads), stop push buttons on machines, safety sign highlighting.
- No smoking areas: Use red and white alternate stripes.
- Hydrants: Paint in accordance with NFPA recommendations;

Vermillion, Candy- Apple Red, White, Lime Yellow

- Fire apparatus.

White (Traffic)

To mark facilities for good housekeeping. Aisle marking, corners, waste receptacles, floor areas immediately surrounding waste receptacles, etc.

Blue (Precautions)

To mark electrical apparatus. Electrical controls, switch boxes, operating levers, ovens, vats, valves, tanks, compressors, etc.

Green (Safety)

To mark first-aid equipment. Stretchers, stretcher areas, gas masks and respirator containers, surgical wagons, etc.

Orange

To mark hazardous machines or equipment. Interior surfaces of fuse boxes, power boxes, machinery guards, exposed moving parts, rolling stock, hand trucks, pallet trucks, fork-lifts, waste trucks, conveyers, etc.

Note:: Paint wheels on rolling stock BLACK.

Yellow (Med.) and Black Alternate Diagonal Stripes

To mark stumbling, falling, or tripping hazards, protruding parts, curbs, dead ends, low obstacles, railings, stairway approaches, floor pan edges, pillars and posts.

Gray (Office Machines)

To mark utility areas and equipment. Packaging tables, steel racks, supplemental equipment, cupboards, storage bins, shelves, work benches, etc.

Green (Hi-Lite)

To mark stationary prime equipment. All prime equipment not mentioned above: presses, roller coaters, slitters, shears, breaks, saws, lathes, mills, planers, grinders, drill presses, welders, safety sign background.

Note:: IVORY (Hi-Lite) for all moving parts of above equipment for contrast and better visibility.

Appropriate color coded stripes shall be placed around machinery and electrical apparatus in accordance with General Industry Safety Orders (GISO), CCR (8).

31020.7.3 Safety Awards Program

Local divisions, units, or individuals employed within the Department shall be eligible to receive an award for their significant achievements or contributions to safety and health programs.

Safety committees shall:

- Use wide latitude in the selection of award categories to accommodate local operations.
- Forward recommendations to the hiring authority for approval with a brief description of the safety achievement.

Upon approval, a Certificate of Achievement shall be prepared for signature and presentation by the hiring authority.

See Section 31030 of this manual for further information on awards programs.

31020.7.4 Accident Prevention (Training)

Ongoing training in safety, sanitation and health practices shall be provided to all employees and inmate employees.

Training shall consist of identification of the hazards associated with the particular assignment, including how to perform the task safely, how to prevent injury to self or others, and how to handle emergencies involving toxic, hazardous, volatile substances.

Supervisors shall provide training for all employees under their supervision.

Training shall be provided by the appropriate trained specialist for the particular hazard involved; e.g., fire and safety areas shall be performed by the Fire Chief or their designee. Sanitation shall be performed by the medical officer or their qualified designee, etc. All training should be coordinated through IST when appropriate.

Safety meetings shall be conducted commensurate with the hazards involved in the work assignment.

Safety training aids (movies, slides, handouts) may be provided from appropriate sources (IST, Fire Chief, etc.) to assist with appropriate training.

All supervisors shall receive training needed to perform required inspections appropriate to their work areas. Training for safety and health and fire safety shall be provided by the institution Fire Chief or their qualified designee. "Qualified" for this type of instruction means a person who has attended the Basic Safety Training class through the State Office of Insurance and Risk Management.

31020.7.4.1 Employee Protection Plan Guidelines

Central Office and each institution and parole office shall prepare a written evacuation plan to be used in the event of fire or other emergencies. This plan shall be reviewed annually and updated as necessary.

Proper compliance with applicable laws pertaining to fire and life safety require that all employees be instructed and kept informed of their duties and responsibilities in the event an evacuation is necessary.

Specific instructions relating to evacuation plans are contained in Central Office/Parole Evacuation and Emergency Management Process of this manual and the Fire Prevention and Suppression Operational Procedure of each institution.

Routes for evacuation of each area, safe assembly area, alternative housing, food service for inmates, provision for medical care and transportation for injured staff and/or inmates shall be included.

- An evacuation may be directed during an emergency by the Fire Chief, institution firefighter, unit lieutenant or other personnel in charge of the threatened area.
- Evacuation routes and instructions shall be posted on the walls of work areas.
- Exit signs shall be placed to indicate all exits from each area.

31020.7.4.2 Safety Inspections and Surveys

Periodic health, safety and sanitation inspections shall be conducted throughout all work areas on the following schedule (attach copies of all forms used):

Daily

Supervisors shall perform brief visual inspections of their immediate work areas at the beginning of their shift and identify that:

- All fire extinguishers are in place, operative, and accessible.
- All exits are marked.
- Evacuation signs are posted.
- Proper safeguards are in place as required for all machinery.
- Employees are using appropriate protection for the hazards involved.
- The working environment is safe and healthful for all employees.

Reports of deficiencies shall be made indicating any item which cannot be readily corrected. These reports shall be forwarded to the immediate supervisor.

Weekly

Weekly inspections shall be made of each work area by a supervisor trained in performing more thorough inspections. Supervisors shall not inspect their own work areas, but instead, a supervisor from an adjoining area shall conduct the inspection. A “Hazard Inspection Checklist” shall be used for these inspections.

Copies shall be routed to the department head and the institution/parole region safety coordinator, and a copy maintained by the supervisor of the work area.

Inspection records shall be maintained by the safety coordinator for a period of two years.

Monthly

The institution Fire Chief, or their designee, shall conduct a comprehensive monthly inspection for fire and life safety of all areas. Reports of deficiencies shall be documented and a copy sent to the Warden, and a record maintained by the area supervisor where the deficiency is noted.

The institution medical officer shall conduct monthly health and sanitation inspections for compliance with health and sanitation laws and regulations. Reports of findings shall be maintained and routed as for the fire and life safety inspections indicated above.

Quarterly

Specific fire safety inspections shall be conducted by the Fire Chief or their designee as outlined in the Fire Protection in Section 52090 of this manual.

Annual

Annual fire and life safety inspections shall be conducted by the State Fire Marshal's Office attended by the institution Fire Chief or their designee.

Annual health and sanitation inspections are conducted by a sanitation engineer from DHS. The supervisor of each work area shall accompany and assist the sanitation engineer in the inspection of the area.

Complete cooperation from supervisors and employees shall be given to these inspectors.

Distribution of Inspection Reports

Copies of the above inspection reports shall be forwarded to:

- Warden/RPA.
- Deputy Director, Institutions.
- Deputy Director, ASD.
- Assistant Deputy Director, Health Services.
- Health and Safety Officer.
- All other appropriate personnel responsible for the deficiencies noted.

31020.7.4.3 Environmental Health Survey

Environmental health surveys are objective evaluations of institutions and camps to determine if a healthy and safe environment exists for all departmental employees and inmates.

DHS, Environmental Health Division (EHD), conducts environmental health surveys at each institution semi-annually and at each conservation camp annually. The inspection is followed by a written report identifying observed deficiencies.

31020.7.4.3.1 Environmental Health Survey Process

The following process is designed to facilitate the correction of deficiencies and monitor corrective actions. To further identify the Environmental Health Survey process, a flow chart of the sequence of events has been added for reference.

Notification

At least two weeks prior to the on-site survey, DHS-EHD shall provide written notification to the institution or camp to be surveyed; the Deputy Director, Institutions; the Chief, PFAB; and the Health and Safety Officer, Central Office.

Inspection Team

The following personnel shall accompany the Environmental health sanitarian on the survey:

Institutions

- Local safety coordinator.
- Chief of Plant Operations, Chief Engineer, or Building Trades Supervisor.
- Supervisor of the area being inspected.

Camps

- The camp's lieutenant or sergeant.
- Supervisor of the area being inspected.

The camp's ranger, representing the Department of Forestry and Fire Protection, shall always be invited to participate with the inspection team.

Distribution of Health Survey

DHS-EHD shall provide copies of the completed environmental health survey to:

- Warden.
- Deputy Director, Institutions.
- Deputy Director, Administrative Services.
- Deputy Director, Evaluation and Compliance.
- Deputy Director, P&CD.
- Health and Safety Officer.
- The Chief, PFAB.

31020.7.4.4 Fire and Life Safety Survey

Fire and life safety surveys are objective evaluations of institutions and camps to determine if a safe environment exists for all departmental employees and inmates.

The State Fire Marshal's Office conducts a fire and life safety survey at each institution annually and at conservation camps upon request. The inspection is followed by a written report identifying observed deficiencies.

31020.7.4.4.1 Fire and Life Safety Survey Process

The following process is designed to facilitate the correction of deficiencies and the monitoring of the corrective process. To further identify the fire and life safety process, a flow chart of the sequence of events has been added for reference.

Notification

At least two weeks prior to the survey, the State Fire Marshal's Office shall provide written notification to the institution or camp to be surveyed; the Deputy Director, Institutions; The Chief, PFAB; and the Health and Safety Officer.

Inspection Team

The following personnel shall accompany the Fire Inspector on the survey:

Institutions

- Local Fire Chief.
- Chief of Plant Operations, Chief Engineer, or Building Trades Supervisor.
- Supervisor of the area being inspected.

Camps

- The camp's lieutenant or sergeant.
- Supervisor of the area being inspected.

The camp's ranger, representing the Department of Forestry and Fire Protection, shall always be invited to participate with the inspection team.

Distribution of Fire Inspection

The State Fire Marshal shall provide copies of the completed fire inspection to:

- Warden.
- Deputy Director, Institutions.
- Deputy Director, Administrative Services.
- Deputy Director, Evaluation and Compliance.
- Deputy Director, P&CD.
- Health and Safety Officer.
- Office of Compliance.

31020.7.4.5 Plan of Correction

Within 30 days from the date of receipt of an official written environmental health survey from DHS-EHD or fire inspection, the Warden shall submit one copy of a Plan of Correction to the Health and Safety Officer. The Plan of Correction shall be prepared using the appropriate format and shall include the information requested to correct each deficiency. The Health and Safety Officer shall act as the Central Office coordinator for review and approval of the Plan of Correction.

The Health and Safety Officer shall review the Plan of Correction. If problems pertaining to other divisions arise, the Health and Safety Unit shall take the lead and coordinate with that division and the institution to resolve the problem. This approval process shall be completed within 15 working days after the Plan of Correction is received in the Health and Safety Unit.

Resolution of Problems

If the Plan of Correction is considered inadequate and recommendations are made by individual divisions to change the plan, the Health and Safety Officer shall take the appropriate steps to ensure that the affected deputy directors, which shall always include the Deputy Director for Institutions, and the institution meet or otherwise reach consensus on the appropriate corrective action to be taken. In the event a consensus cannot be reached by the affected deputy directors on the appropriate corrective action, the Director shall resolve the difference(s).

Letter of Approval

If the Plan of Correction is approved by the reviewers as submitted by the institution, the Health and Safety Officer shall prepare a letter of approval to the institution for the signature of the Director.

Filing

All Plans of Correction shall be filed with the appropriate control agency. In some instances, the control agency may be required to approve the Plan of Correction.

31020.7.4.5.1 Follow-Up Inspections

Within 90 days after a corrective action plan is approved by the Director, an inspection shall be conducted by staff from the Health and Safety Unit to determine the level of compliance. Proposed capital outlay solutions not currently under way shall be granted extended time frames for follow-up inspections, allowing time to show substantial progress of corrective action(s). However, sufficient written documentation shall be evident at the time of the follow-up inspection; e.g., capital outlay requests, BCPs, etc.

Advance Notice

Each field operation unit shall be afforded advance notification of the dates that a follow-up review shall be conducted.

Entry/Exit Interviews

An entry interview shall be held with local administrators prior to the review activities to delineate the scope and method of the review and identify local resources required to conduct the review. At this time a staff person shall be identified to serve as review liaison between the field unit and the review team. Reviews shall include the inspection of corrective action undertaken on deficiencies cited in the most recent report by DHS for environmental health surveys, or the State Fire Marshal, for fire and life safety surveys. At the conclusion of the review, an exit interview shall be conducted with local administrators delineating review findings. The results of the follow-up review shall be reported to the Chief, PFAB.

Report of Findings

The Chief, PFAB shall report the findings of all follow-up inspections to the Deputy Director, Evaluation and Compliance, with copies to the other managers. If the follow-up inspections or subsequent environmental health surveys or fire and life safety surveys indicate that corrective action has not been taken or is seriously behind schedule, the Chief, PFAB shall inform the Deputy Director, Institutions Division, and the Director by the Deputy Director, Evaluation and Compliance, of the problem with appropriate recommendations for action.

31020.7.4.6 Vehicle Safety

The purpose of the Department's Vehicle Safety Program is to:

- Ensure that all employees possess a valid driver's license appropriate to the vehicle being used.
- Provide appropriate training for vehicle being used.
- Establish a standard policy for promptly reporting vehicle accidents.
- Establish guidelines for checking vehicles, maintaining vehicle data, and handling disabled vehicles.
- Reduce accidents and lower vehicle maintenance repair costs.
- Ensure that all employees are aware of and understand the seat belt policy.

Valid Driver's License

Every employee who drives on official State business shall possess a valid driver's license appropriate to the type of vehicle operated. It is each operator's responsibility to ensure that their license is valid in accordance with SAM Section 750.1.

- All drivers who are expected to drive on official State business shall successfully complete an approved defensive driving course at least once every four years.

- All new employees who are expected to operate vehicles on State business, even if occasionally, shall successfully complete the defensive driver's course as per SAM 750. The supervisor shall immediately request the training officer to enroll the new employee in the next available defensive driver training course given by the DGS.
    - Fork lift operators shall not drive a fork lift until they have successfully completed the appropriate training.

Refresher Course

- Employees who are involved in more than two preventable vehicle accidents within a 12-month period shall be required to attend a refresher defensive driver's training course. The course is coordinated by the DGS.

Safety Equipment

- All passengers and drivers shall use available safety equipment in the vehicles being operated. This includes seat belts and/or shoulder harnesses. Medical exceptions may be granted only by the State Insurance Officer. A detailed explanation of medical reasons for the exception shall be submitted to the Health and Safety Unit and transmitted to the State Insurance Officer.
- Privately-owned motorcycles or motor-driven cycles are not authorized for State business.
- State vehicles shall not be driven from office to home without advance approval of the immediate supervisor

Accident Identification Card, STD Form 269

The driver of a State-owned vehicle involved in an accident shall record all pertinent information on the Accident Identification Card, STD Form 269, found in the glove compartment of the vehicle before leaving the scene of the accident.

If another vehicle is involved, the appropriate portion of the form (front panel) shall be completed by the employee and given to the driver of the other vehicle.

All vehicle accidents which result in an injury to any person or which involve serious damage to the property of others, shall be reported immediately by telephone to the nearest adjusting office of the insurance company listed on the STD Form 269.

Additional instructions are shown on the STD Form 269. Authorized drivers involved in a State-owned vehicle accident shall comply with these instructions. The completed card shall be retained for review by the supervisor authorizing the use of the vehicle and serves as an aid in the completion of other accident reporting forms.

31020.7.4.6.1 Seat Belt Policy

Each employee of the Department shall wear seat belts while operating a vehicle on State business. Management shall make prudent exceptions, after consultation with the State Insurance Officer, for disabled employees who are hindered by the use of such restraint equipment.

31020.7.4.6.1.1 Responsibility Regarding Seat Belt Use

All employees shall attest to having read and understood the provision of the SAM pertaining to the safe operation of vehicles while on State business. The certification document, CDC Form 975, shall be signed by all employees acknowledging compliance.

- Arrangements shall be made to make available to all new employees at orientation meetings an informational film on seat belts. Specific scheduling information shall be given to new employees in institutions/parole regions.

Supervisors

Supervisors shall ensure employees are aware of this policy and shall monitor employee compliance.

Safety Coordinators

Safety coordinators shall ensure a seat belt film is shown to all new employees during their orientation and at other times as appropriate to implement this policy. The safety coordinators shall monitor overall compliance.

Employees

It is mandatory that:

- Any employee operating a private vehicle while on State business or a State vehicle use the belt provided.
- All passengers riding in a private vehicle utilized for State business or any State vehicle use the seat belts provided.
- All seat belts and related restraint systems shall be maintained in operational order and available for use in vehicles as required.

Any employee who fails to use the seat belt (and/or related restraint equipment) shall be subject to appropriate disciplinary action.

31020.7.4.7 Medical Assistance to Employees

The following are considered reasonable limited services which may be provided through use of departmental medical services and staff:

- First-aid treatment.
- First medical treatment of work injury.
- Initial diagnosis and prognosis of work-connected conditions.
- Arrangement for further treatment.
- Evaluation of physical ability of injured to return to work.
- Physical examinations, pre-employment and periodic, for fitness and capability of safely performing arduous and hazardous tasks.

Prevention

Preventive medical measures such as chest x-rays, laboratory tests, immunization, and measures that prevent or minimize hazards of work-connected exposure to contagious diseases may also be provided upon approval by SCIF as a service to employees.

First – Aid Limitations

First medical treatment of work injury shall be limited to injuries that usually do not require more than five calls to a first-aid clinic or disability beyond the date of injury. Injury that requires hospitalization may result in payment of temporary disability compensation or permanent disability, and shall be treated by a physician as listed on the STD Form 621 when there has been no pre-designation of physician by the employee.

31020.7.4.8 Medical Assistance to Visitors/Public

For visitors who become ill or are injured, first-aid is the only medical service that may be provided.

Before discharging the visitor, medical personnel shall be certain that:

- Visitor has been transferred to another physician.
- A friend or relative accepts responsibility for further care of the ill or injured visitor or (in case no further medical attention is necessary) until proper care is available.

Financial Responsibility

When necessary to call outside physicians and/or ambulances, it shall be made clear that the visitor is financially responsible for medical care, treatment, and other services provided.

Records

Complete records shall be kept of all such first-aid services rendered. Records shall fully identify the person treated, date of injury, state the full diagnosis, give the cause for treatment (e.g., description of accident, etc.) and detail the services rendered, including drugs and supplies used.

Accident Report

When the visitor alleges injury or was involved in an accident on State property, it is essential that a report be made on Accident Report, STD Form 268, in accordance with the provisions of this manual.

31020.7.5 Occupational Injuries/Illnesses

Every employee shall report an injury/illness immediately (within 24 hours) and inform supervision of the details of the injury/illness. Failure to do so may jeopardize claims for workers' compensation benefits.

The appropriate order of action to be taken in accordance with the Workers' Compensation LC 4600 is outlined in detail in Workers' Compensation Benefits (Employees) and Inmate Injuries of this section.

SCIF is the Department's agent in administering the State workers' compensation benefits. SCIF carries out the details of claims adjustment including medical contracts and evaluations, payment of approved benefits, representing the Department in matters before the Workers' Compensation Appeals Board (WCAB), administering vocational rehabilitation coordination when necessary, and notifying the Department when permanent disability warrants a stipulated award or a compromise and release (C&R) settlement.

All issues of dispute shall be handled and resolved by SCIF and/or WCAB.

The above process shall not inhibit the employee's right of appeal to the WCAB. It is recommended that employees try to resolve any issues with SCIF and/or the appropriate supervisors.

31020.7.5.1 Employee's Workers' Compensation Benefits

Workers' Compensation Temporary Disability (WCTD)

Workers' compensation provides injured employees and their dependents a means of support when they are unable to work because of a job-related injury, workers' illness, or death, and minimizes economic hardship and compensation for physical suffering. Benefits include medical care, the temporary cost of transportation to and from medical appointments, prescription charges, death benefits, and vocational rehabilitation if the employee is a qualified injured worker and not able to return to former employment. For more detailed information, refer to the SPB Transaction Manual and Controller's Payroll Procedure Manual. An employee may receive WCTD plus supplementation of accrued sick leave or vacation benefits, up to the gross regular salary.

- An employee may receive a gross amount (WCTD) plus supplementation up to the gross salary that would have been received for the period of disability had the injury not occurred.
- An employee cannot receive less than the minimum WCTD compensation rate of $112.00 per week.

Industrial Disability Leave (IDL)

A disabled employee, included under Division 4 of the LC, may receive IDL benefits in lieu of WCTD. These benefits are for full normal pay for the first 22 working days and then reduced to two-thirds of the gross monthly salary for the remaining period of time the employee is eligible to receive benefits up to a maximum of 52 weeks, within two years from the first day of disability.

- EIDL is extended to non-represented employees who are in supervisory, management, or confidential positions and who are responsible for the supervision of represented employees who are eligible for EIDL (DPA 599.769). The enhanced benefit shall be equivalent to the insured employee's net take-home salary on the date of occurrence of injury. Eligibility and benefits may continue for no longer than one year after the date of occurrence of the injury. For the purposes of this section, "net salary" means the amount of salary received after federal income tax, state tax, and the employee's retirement contribution has been deducted from the employee's gross salary. To determine eligibility of rank and file employees, refer to the specific bargaining unit contract.

Assault

- A criminal act of violence on the entitled employee who was performing in the line of duty.

Criminal Act of Violence

- An unlawful act which results in injury to the entitled employee.

How to Request EIDL

If the supervisor and reviewing officer believe that the injury resulted from an inmate/parolee assault, then a separate memorandum with a recommendation shall be prepared for the signature of the hiring authority. The memorandum shall include the following:

- Name of employee.
- Date of injury.
- Copy of SCIF Form 3067.
- Copy of all medical information.

- Statement that the employee is receiving IDL.
- Circumstances surrounding the injury; e.g., “Injury occurred at the hands of an inmate as noted on the `Institution Incident Report' dated _____.”
- Any available witness reports.
- Recommendation for EIDL based upon the stated facts.

Appeal

Should the claim for EIDL be denied by the hiring authority, the employee's excusing remedy for redress is the Director. The appeal shall contain all of the pertinent facts surrounding the assault and any available supporting documentation.

31020.7.5.1.1 Supervisor's Responsibility

Upon receiving a report of an employee's injury/illness, the supervisor shall:

- Ensure that the employee receives appropriate medical assistance, which involves:
  - First-aid for minor injuries.
  - Inform the doctor of the employee's work duties and any modified duties which may enable the employee to return to work earlier.
  - Determine whether or not the employee is able to work.
- Prompt medical treatment when necessary.
  - Transportation may include a State vehicle, ambulance or taxi and a designated State representative to accompany the employee for medical treatment.
- The treating physician for the first 30 days shall be selected from the STD Form 621, although in cases of extreme emergencies, the injured shall be transported to any available doctor, hospital, or public medical service.

Serious Injury

- Notify immediately by telephone the departmental Health and Safety Officer of accidents involving death or serious injury/illness. The Health and Safety Officer shall notify the DIR, Division of Occupational Safety and Health.
- Identify safety hazards and either take action to eliminate or minimize the hazards or if corrective measures exceed the supervisor's authority, report the existing hazard to the local safety coordinator.
- Obtain copies of the `Fifteen Questions' pamphlet to give to injured employees reporting an occupational injury. The supervisor's review on SCIF Form 3067 shall indicate if and when (by date) the `Fifteen Questions' pamphlet was given to the employee

Supervisor's Guide

A supervisor's guide `Helping Your Injured Employees' which answers many questions concerning workers' compensation benefits is available from the local personnel office, safety coordinator, or the Department's Health and Safety Unit.

Documentation

- Complete the supervisor's review in detail to indicate all the facts surrounding the injury.
- Include a recommendation for EIDL if the physical injury resulted from inmate/parolee assault.
  - SCIF Form 3067 shall be filed even if the supervisor does not agree with the employee's claim for benefits. The filing of this report is not an admission of liability. However, it does start the Statute of Limitations running when filed and the employee receives a notice of benefits or the employee's `Fifteen Questions' pamphlet.
- In all cases of loss of time from work:
  - Maintain personal contact with the employee who is unable to return to work.
  - Arrange for completion of CDC Form 998 , Employee's Attendance Report.
  - Discuss return to work with the employee, physician, return-to-work coordinator and other appropriate staff.
  - State on the supervisor's review (in the “comments” section of the CDC Form 998) that the attending doctor was contacted and advised of the availability of modified work assignments, or
  - Explain why contact and light duty discussion did not occur.
- Complete SCIF Form 3067, Employer's Report of Occupational Injury or Illness, within 24 hours after knowledge of the injury or illness. If there is any doubt as to whether the injury was work-related as a result of State employment, the supervisor shall check the appropriate box. Only factual, not subjective, information should be reflected in the supervisor's statements.
- Upon completion, forward the original and six copies to the reviewing officer.
- In those injuries which involve immediate medical assistance from a private physician, complete three copies of SCIF Form 358, Medical Service Order, and distribute this form as follows:
  - Employee - one copy.
  - Supervisor - one copy.
- Workers' Compensation file - one copy.

Physician’s Designation

- Unless the injured employee has on file a previously completed Physician's Designation, CDC Form 912, select the treating physician from the Notice to Employees, STD Form 621.
- Complete Medical Service Order SCIF Form 358, and give to the employee prior to receiving medical care, if possible

Medical Service Order

- If the injured employee is not able to return to full duty within five working days from the date of injury, notify the local RTWC immediately.

31020.7.5.1.2 Employee Responsibility

The employee shall:

- Immediately report injuries (within 24 hours) and inform the supervisor of the details surrounding the incident. Failure to promptly report the injury promptly may result in delay of benefits.
- Obtain necessary first-aid treatment (from the medical department if the injury occurs in an institution) and return to work if medically feasible.
- If the employee is unable to return to work or if further medical treatment is required:
  - Inform their supervisor immediately.
  - Participate in examinations and treatment by a physician or facility prescribed by the Department, or the employees own physician if the Physician Designation, CDC Form 912 was submitted prior to the injury.
  - Complete and submit the Employee's Attendance Report, CDC Form 998, for all time lost because of the injury.
- Return to work as soon as medically feasible.

31020.7.5.1.3 Reviewing Officer's Responsibility

The reviewing officer (second level supervisor) shall:

- Review the content of SCIF Form 3067.
- Make an investigation at the scene of the accident to reconstruct the circumstances.
- Talk to the injured and any witnesses to assure that adequate information regarding the accident has been recorded.
- Assure that the date of the report and the date of injury are within 24 hours of each other. Injuries shall be reported within this time frame to help ensure prompt delivery of benefits.
- Initiate changes to minimize the potential recurrence of a similar accident.
  - Identify and make recommendations for additional OJT, when appropriate.
- Upon completion of review of the accident, send all copies of SCIF Form 3067 to the Personnel Office.

Distribution SCIF Form 3067

An original shall be made and the appropriate number of copies shall be forwarded to the Personnel Office for the following distribution:

- Original and one copy to SCIF who shall forward the copy to the DIR.
- Local safety coordinator (follow-up and recording).
- Personnel/business manager's Workers' Compensation file.
- Reviewing officer.
- Employee's supervisor.

31020.7.5.1.4 General Benefit Delivery – Personnel Transactions

Upon receipt of SCIF Form 3067, if time is lost beyond the day of the injury or if the employee is treated by a private physician, Personnel shall forward the form to the SCIF Office.

- This form is considered "confidential" and is not automatically made accessible to the injured employee or their attorney or representative. Upon specific request, the employee or their designee shall be given an opportunity to view the completed form in accordance with the provisions of Section 13030 of this manual.
- A separate file is maintained for workers' compensation claims and related material. Access to this file by other staff shall be limited to those who have a "need to know" in order to perform their duties as they relate to the status and processing of the claims.

Injured employees and their representatives are referred to the SCIF office for information.

The Personnel Assistant II shall prepare and maintain these records.

The unit timekeepers shall notify personnel of time lost.

When an employee goes on temporary disability (TD), the local Personnel Transactions Section shall send the employee the following:

- Industrial Disability Benefits Information, STD Form 619, provides the employee with benefit descriptions; i.e., Industrial Disability Leave (IDL), TD, or TD with supplementation.
- Benefit Option Selection, STD Form 618, used by the employee to notify the Personnel Transactions Section of the benefit selected.

Employee Response

The employee has 15 calendar days from the date typed on the STD 618 to notify the Personnel Transactions Section of the benefits selected. If no notification is made, the Personnel Transactions Section shall provide IDL benefits if IDL benefits are greater than TD benefits. If the injured employee is incapable of making decisions for themselves, a guardian/trustee shall be requested.

The employee shall submit CDC Form 998, Employee's Attendance Report, each pay period while on TD, IDL, or Employee Response EIDL.

The injured/ill employee may, after 30 days from the date an injury/illness is reported, exercise the right to be treated by a personal physician/facility within a reasonable geographic area. The employee may, at any time, request of SCIF a change of treating physician if existing treatment is felt to be unsatisfactory.

The employee shall accept a medically approved temporary duty assignment when offered. If this duty is refused, IDL, TD, or EIDL benefits may be terminated with ineligibility to receive TD benefits. The injured employee shall participate or cooperate in a reasonable vocational rehabilitation plan or lose entitlement to

EIDL or IDL and shall be placed on TD with supplementation (if otherwise eligible). The employee shall have 15 calendar days to notify the Department to supplement TD payments.

31020.7.5.2 Inmate Injuries

Inmates shall:

- Report an injury/illness immediately (within 24 hours) and;
- Inform supervision of the circumstances of the injury/illness.

Failure to complete the above actions may jeopardize or delay any benefits.

31020.7.5.2.1 Distinguishing Non-Occupational Injuries

Departmental staff and inmates shall report all injuries sustained by inmates. This reporting requirement enables the Department to provide prompt medical care and to provide an accurate, detailed history of the cause of the injury. An accident investigation shall be conducted to determine the cause of the injury and necessary steps to avoid further similar incidents.

Reporting

Because of the high cost of workers' compensation and vocational rehabilitation, it is extremely important that inmate injuries be differentiated from industrial (job-connected) and non-industrial injuries. For example, an injury which occurred in a vocational class may or may not be industrial depending on whether the job performed is production oriented. An injury which occurs in the welding shop under the supervision of maintenance personnel is an industrial injury if the inmates are in an assigned work position.

Recording Guidelines

To provide a uniform method for reporting and recording non-occupational injuries to inmates, the following guidelines shall be followed:

- When an injury is reported to the supervisor, they shall record the details of the injury on the reverse side of the Employer's Report of Occupational Injury or Illness, SCIF Form 3067. All the same information shall be recorded as though the injury was an occupational injury. Be sure to mark the proper block indicating that the injury is not a work-related injury or illness.
- Forward a copy of the completed SCIF Form 3067, after supervisor's review, to the inmate's C-File and the local safety coordinator for their review and appropriate action.
- The medical department shall provide appropriate treatment or medical referral, then complete a CDC Form 7219, Medical Report of Injury or Unusual Occurrence giving all the details of the injury, diagnosis, and prognosis. Forward copies to the local safety coordinator and the inmate's C-File.

Inmate Injury Recording

In order to provide a convenient, centralized record of inmate injuries, illnesses or deaths which fall within the definition of a recordable occupational injury or illness, the Log 200 shall be maintained by the medical department.

- This shall be a separate log from that maintained for employee cases.
- This log may be used to record all injuries to inmates which require more than first-aid treatment.
    - Work injuries on the log shall be identifiable as such.

The SCIF Office handling the workers' compensation claim for an occupational injury shall be provided with copies of SCIF Form 3067 and CDC Form 7219 and supporting documentation, which is completed for a non-occupational injury/illness suffered by the inmate at any time during their incarceration. This information is used to make a proper determination for workers' compensation benefits.

31020.7.5.2.2 Occupational Injuries

Under the provisions of Chapter 1347 of the Statutes of 1976, inmates are eligible for workers' compensation benefits for injuries which occur during their incarceration while engaged in assigned work as long as the inmates are not injured as the result of an assault in which they were the initial aggressor or as the result of intentional acts of the inmates to injure themselves. These provisions:

- Ensure to injured inmates and those dependent upon them an adequate means of subsistence after their release if they are unable to work.
- Provide any and all reasonable medical treatment to cure or relieve the inmate from the effects of the injury/illness.
- Provide for rehabilitation of injured inmates so that they may engage in suitable and gainful employment upon their release.

The requirements of CAL-OSHA (LC 6300 through 6708) do not apply to inmate injuries or illnesses with the exception of LC 6413 and 6413.2.

The reporting requirements apply to inmates' occupational injuries in the same manner as with employees, except:

- All medical treatment to an inmate worker shall be rendered by, or at the direction of, the institution medical department.
- An inmate worker who is unable to return to work immediately shall be placed in lie-in, temporary medical unassigned, or permanently disabled status by action of the institution medical department. The case shall be presented to the classification committee for confirmation of the action.

The workers' compensation law is more specific and detailed than this section which is general and simplified as much as possible. If there is any conflict, the law takes precedence and shall be used as the basis for all decisions.

31020.7.5.2.2.1 General Responsibility

To prevent or reduce the severity of injuries and to minimize the Department's costs, the following are of special importance:

- For administrative staff:
    - Establish a prompt reporting system for work-related injuries or diseases to inmates.
    - Establish procedures which call for follow-up by a supervisor to ensure that proper treatment is provided to assist the inmate to return to an appropriate work assignment as soon as medically feasible, and to see that rehabilitation services are offered when needed.
- For work crew supervisors or other appropriate employees:

- Ensure that inmates wear proper clothing on the job, including headgear and footwear, and that all safety devices are used and all safety procedures are followed.
- Ensure that first-aid is administered for minor injuries and, if necessary, to arrange for medical treatment by a departmentally-employed physician upon discovery of a work injury to an inmate.
- Report the results of the accident or illness, the actual or probable cause, the action taken, and the known facts about the accident or illness.
- Arrange transportation with appropriate security precautions for the injured inmate using State vehicle, taxi, ambulance, or other appropriate vehicle.

SCIF reporting shall be done within five calendar days from the time the inmate's injury was known to need medical attention other than first-aid. This includes the following:

- Fatalities attributable to the work assignment.
- Injuries or illnesses which are work-related and result in the loss of a work day.
- Non-fatal injuries or illnesses which do not result in any lost work but do result in a transfer to another assignment, require medical treatment (other than first-aid), or involve loss of consciousness or restriction of work or motion.

If there is any doubt about the need for treatment beyond first-aid, arrangements shall be made for an examination by a physician and the injury or illness shall be reported to SCIF as outlined above. A SCIF Form 3067, Employer's Report of Occupational Injury or Illness, shall be completed whenever there is a disagreement between the inmate and Department staff regarding eligibility of the inmate for workers' compensation benefits.

The institution shall designate a staff person to coordinate the workers' compensation program for inmates. The duties and responsibilities of this assignment include, and are not limited to the following:

- Ensuring that all SCIF forms are completed as appropriate.
- Transmitting the original of SCIF Forms 3067 and 3010 to SCIF within five calendar days from the date the inmate's injury was known to require medical treatment other than first-aid. Copies of the forms shall also be forwarded to the following:
  - The Division of Labor Statistics and Research, P.O. Box 965, San Francisco, CA 94101.
  - The reviewing officer.
  - The institution safety coordinator (for follow-up and record).
  - The records officer for the inmate's C-File.
  - The Health and Safety Office, Central Office.

31020.7.5.2.2.2 Responsibility of the Workers' Compensation Coordinator for Inmates

Each institution's business manager and the assistant RPA of each region shall:

- Oversee and coordinate the Workers' Compensation Program for inmates to ensure prompt, uniform reporting and follow-up.
- Serve as the institutional or regional parole contact person for information and inquiries from Central Office, SCIF, the DIR, other state agencies, and the public for work-related injuries to inmates.
- Recommend to the Warden/RPA and the Departmental Health and Safety Officer any needed changes in the Workers' Compensation Program for inmates.

31020.7.5.2.2.2.1 Notification to Inmates of Workers' Compensation Benefits

All inmates shall be given general information on the availability of workers' compensation benefits for injuries sustained in the performance of assigned work at the time of their commitment or transfer to the Department.

The same information shall be posted at every institution and camp in conspicuous locations where inmates throughout the facilities shall have access to it. It is especially important that the information be posted at, or reasonably near, inmate work locations.

The Department shall provide to injured inmates individual notice of the vocational rehabilitation services that are available to inmates disabled for 28 days or more.

31020.7.5.2.2.3 Preparation and Use of Required Forms

SCIF Form 3067

Any injury to an inmate which results from the performance of their assigned work as defined in DOM 31020.7.5.2.1 of this chapter, regardless of the seriousness of the injury or the treatment required, shall be reported on SCIF Form 3067. The supervisor of the injured inmate shall complete the form in sufficient detail to give an accurate picture of the circumstances which caused the injury and forward it to their supervisor. Only facts, not opinions based upon speculation, shall be documented.

The inmate's CDC number and the ward "inmate" in red ink shall be included in item 6; date of imprisonment shall be shown in 12A; N/A shall be shown in items 13 and 13A. SCIF Form 3067 is then forwarded to the reviewing officer.

The reviewing officer shall:

- Review SCIF Form 3067 and make an investigation at the scene of the accident to reconstruct the circumstances, question the injured inmate and any witnesses, and generally ensure that adequate information regarding the accident has been recorded.
- Initiate any changes to minimize the potential for another similar accident, including additional OJT if needed.
- Submit a "Supplemental Information Regarding Work Disability", SCIF Form 68a if SCIF Form 3067 is found to contain inaccurate information. Additional information is provided for further clarification of circumstances surrounding the injury. It is important that the questionable facts about the alleged circumstances of injury or death be reported to SCIF so that it may investigate as needed.

Examples of circumstances requiring a supplemental report to SCIF are when:

- The date of the inmate's release from prison becomes known after the injury.

- A parolee receiving temporary or permanent disability benefits is returned to prison.
- A parole violator, who had been receiving temporary or permanent disability benefits, is subsequently released from prison.

- For a work-related injury or illness which required the medical services of a physician, request the preparation of the "Doctor's First Report of Occupational injury or illness", SCIF Form 3010 from the medical department.

Any forms, reports, or correspondence between the Department/ institution/parole region and SCIF become the property of SCIF and shall not be released to any inmate or employee except through the SCIF adjuster in charge of the claims file.

Distribution

SCIF Form 3067 and copies shall be forwarded to Personnel for the following distribution:

- Original and first copy to SCIF which forwards the copy to the DIR.
- Second copy to the institution's file.
- Third copy to the inmate's C-File.
- Fourth copy to the Health and Safety Unit.

31020.7.5.2.2.4 Notice of Inmate Death

Submitting SCIF Form 3067 serves to notify the Division of Industrial Accidents of the death of an inmate from work-related causes. The Division of Labor Statistics and Research shall be immediately notified by telephone or telegraph of the inmate's death and provided the following information:

- Inmate's name.
- Marital status.
- Age.
- Cause of death.
- Date of death.
- Job classification.

31020.7.5.2.2.5 Acceptance or Rejection of Claim

SCIF notifies the injured inmate by form letter of the claim status and benefits. Departmental staff shall ensure that the injured inmate receives this information promptly. If the claim is rejected, the notice includes instructions for appealing SCIF's decision.

31020.7.5.2.2.6 Appeals

If SCIF denies a claim, the inmate may appeal to the Workers' Compensation Appeals Board (WCAB). A WCAB judge is then assigned to the case and the institution or parole office is notified of the time and place of hearing.

If the inmate requests or if the judge determines the issues are sufficiently complex, an attorney shall be assigned. The inmate shall select an attorney from a panel of qualified workers' compensation attorneys proposed by the WCAB judge in the geographic area. The WCAB judge shall set the attorney's fee which must be paid by the Department if the proceedings are held while the inmate is incarcerated. If the proceedings continue after the inmate is released to parole or discharged, the workers' compensation award stipulates what portion, if any, of the attorney's fee shall be paid by the Department. The workers' compensation attorney shall be accorded the same rights and privileges, and subject to the same restrictions, as any other attorney retained by inmates.

Any hearing requiring the inmate's appearance while incarcerated shall be held at the place where the inmate is housed.

31020.7.5.2.2.7 Workers' Compensation Benefits

Injured inmates are not entitled to any temporary disability indemnity benefits while incarcerated in a State prison. Inmates may qualify for full or partial temporary disability indemnity benefits upon release from prison. The inmate's eligibility shall be determined by SCIF. Such benefit payments shall cease for any period of time during which the inmate is re-incarcerated.

Pre-Release Referral

During the pre-release process, an injured inmate's eligibility for temporary or permanent disability indemnity payments shall be determined by institution or parole staff and SCIF. The pre-release referral material shall include the status of any claim for workers' compensation benefits.

31020.7.5.2.2.8 Medical Treatment

SCIF Form 3010

An injured inmate shall be provide necessary and reasonable medical treatment. The Department has control over treatment provided to an injured inmate while incarcerated in a State prison. The medical department shall complete a Doctor's First Report of Occupational Injury or Illness, SCIF Form 3010, for each industrial injury for which an inmate is treated.

Consulting Physician

In serious cases the inmate is entitled, upon request, to have the Department pay for the services of a consulting physician. The Department shall select the consulting physician who shall be accorded the same privileges and courtesy extended to any physician who provides services to the Department. The provision for a consulting physician in serious cases is designed to meet the possibility of disagreement between the injured inmate and departmentally employed medical staff. Departmental staff shall make a reasonable physician effort to select a consulting physician who is acceptable to the inmate. This may be accomplished by offering the injured inmate a choice of three physicians from whom to choose. The provisions of Section 54040 of this manual are applicable if the costs are borne by the inmate or their representative.

Any request from injured inmates to have the services of a physician for consultation shall be approved by the CMO, or by the departmentally employed physician in the parole division, who shall notify the institution business manager, or in the case of a parolee, the Department's Health and Safety Officer, if it appears that there shall be a recurring need for the physician's services. Departmental staff shall provide whatever assistance is reasonably necessary to engage and facilitate the services of a consulting physician when requested by the inmate.

If staff must arrange for medical treatment of injured inmates from persons who are not employees or under contract to the Department, the physician, ambulance service, or hospital shall be selected from those listed on the Notice to State Employees, STD Form 621, when possible. This form is posted at each

State office and place of work. All other ambulance service and hospital arrangements shall be made as directed by the physician until departmental medical staff assume responsibility for the case.

An injured inmate who required medical treatment beyond first-aid shall not be permitted to return to any work assignment without approval of the CMO or treating physician.

Treatment Upon Release

If medical treatment is necessary after the inmate's release from State prison, SCIF becomes responsible for the first 30 days following the reporting of the injury. Thereafter, the released inmate may choose any physician or facility until treatment is no longer required subject to SCIF rules. SCIF shall be notified of the name and address of the physician or facility selected.

31020.7.5.2.2.9 Payment of Claims

Special Appropriation

Reimbursement to SCIF for the cost of benefits and related expenses shall be paid from a special appropriation established for that purpose.

Billing Code

The Assistant Deputy Director, Financial Management and Support Services Branch, shall notify both the Institutions and P&CSDs each year of the correct billing code which shall be inserted on SCIF Form 3067 in the space provided for "Payroll Agency Code or SCIF Policy No." SCIF submits its invoices directly to the Department's accounting office in Central Office. The eligibility of each inmate whose name and departmental identification number appears on the invoice shall be checked against the accounting office copy of the SCIF notification of acceptance or of the WCAB's award. If valid, a claim schedule shall be submitted to the SCO.

Expenses in Excess of Normal

Any expenses for departmentally authorized medical services during the inmate's incarceration which are attributable to the workers' compensation claim and in excess of the medical services normally provided to the inmate in these circumstances shall be charged to the special appropriation.

Normal Medical Services

All normal medical services currently provided shall continue to be funded from the Department's support appropriation. Additional costs to the Department may include, but are not limited to, special consultant services required by the inmate, special examinations and treatment necessary to evaluate workers' compensation claims, and the need for medical staff to testify at the appeal hearings.

Attorney Fees

If the inmate is represented during any appeal proceedings by an attorney selected from the panel provided by the WCAB judge, the attorney's fee shall be determined by the WCAB judge and paid by SCIF.

Special Liaison Duties

Any additional costs incurred by the Department, clearly necessary as a result of workers' compensation claims for inmates shall be charged to the special appropriation. An example is special liaison duties requiring additional staff travel and overtime.

Invoices

The institution/parole region shall submit invoices to the accounting office in Central Office, listing additional expenses by inmate name and identification number, with supporting documentation showing the reasons for the expenses attributed to workers' compensation.

31020.7.5.2.2.10 Rehabilitation Services

Vocational rehabilitation services needed to determine an inmate's eligibility as a qualified injured worker and to develop any required vocational rehabilitation plan shall be provided by a qualified rehabilitation representative chosen by the Department and SCIF. Such services shall be provided the inmate as soon as feasible and prior to the inmate's release from custody if possible, to prepare the inmate for suitable gainful employment upon release.

Notices

In cases where a work-related disability continues beyond 28 days, the institution's workers' compensation coordinator for inmates shall notify the injured inmate that rehabilitation services are available. A copy of the notice shall be forwarded to DOR and SCIF.

Rehabilitation Program

The institution's workers' compensation coordinator for inmates shall initiate a rehabilitation program for cases where there is a reasonable expectation that the injured inmate shall benefit from a rehabilitation program. When an eligible injured inmate is released, the institution's workers' compensation coordinator for inmates shall notify SCIF so that SCIF can initiate a rehabilitation program. The plan shall include the following elements:

Inmate Residence Plan

- For those cases in which the rehabilitation program shall not be completed prior to the inmate's release or in which the rehabilitation program does not start until the inmate is released because the injury occurred shortly before release, it is important to ensure continuity between the rehabilitation services provided by the institution and those available in the area where the inmate plans to reside upon release. This means that the inmate's choice of residence may be strongly influenced by the availability of a particular rehabilitation service.
- A written description of the rehabilitation plan shall be presented to the Institution Classification Committee or designated subcommittee (if prepared by parole staff and SCIF) for approval. The written description shall be included in the inmate's C-File, and a copy shall be given to the inmate. The rehabilitation plan shall be forwarded to the rehabilitation bureau consultant of the DIR.

31020.7.6 Return-to-Work Program

The Department shall make reasonable accommodation to the known physical or mental limitations of handicapped applicants or employees, including persons who become disabled while employed by the Department.

This requires maintenance of an active Return-to-Work (RTW) Program for industrially injured employees, and to the extent possible, those who are disabled as a result of non-industrial factors. This program shall:

- Facilitate the early return to work of injured employees through a temporary duty assignment for medically restricted staff program.
- Provide a process for rehabilitation, transfer, or other solutions for long-term disability cases.

The goal of the program is to reduce the average number of lost time days resulting from industrial injuries. Attainment of the reduction goals established requires strong RTW committees and accountability of management. Continued effort in reducing time lost from industrial accidents is essential.

31020.7.6.1 Objectives

Return occupationally injured employees to work as soon as medically possible to departmentally identified positions or develop an alternate plan of employment.

Minimize suffering, financial loss, and time loss because of an employee's occupational injury or illness through a planned, systematic program. The program requires that:

- Employees and supervisors report injuries promptly.
- Employees receive prompt medical attention.
- Communication be maintained between the injured employee and the institution/parole region RTWC and/or the employee's supervisor.
- Temporary modified duty assignments be identified and provided (when available) within prescribed medical limitations.

Reduce workers' compensation costs.

Involve the Departmental Health and Safety Officer, the area RTWC, the immediate supervisor of the injured employee, and the SCIF claims representative in a structured planning process for potential RTW problems and follow-up of long-term disability cases.

The program shall be maintained in all institutions, parole regions, and Central Office.

31020.7.6.2 Departmental Health and Safety Officer's Responsibility

The Departmental Health and Safety Officer shall:

- Assist area RTWCs and councils with solving industrial (and non-industrial, as feasible) injury case problems.
- Assist in the establishment of area RTW council and participate in area RTW council meetings at least on a quarterly basis.
- Provide information on RTW options and employment opportunities.
- Arrange for services of a qualified rehabilitation representative as requested.
- Coordinate RTW council meetings for institution and parole region committees.
- Assist in the establishment and coordination of Early Intervention Programs at each institution and parole region.

31020.7.6.3 Area Return-to- Work Program Coordinator's Responsibility

Each institution and parole region shall designate an RTWC who shall:

- Serve as a member of the area RTW committee and work with the appropriate offices of SCIF.
- Schedule RTW council meetings.
- Identify and follow up on compensable injury cases and maintain appropriate monthly records.
- Establish reasonable RTW plans and time frames.
- Involve and advise supervisors and employees in working toward an equitable solution.
- Identify assignments for use of temporarily disabled employees and maintain follow-up records of assigned employees.
- Maintain and/or ensure that supervisors maintain communications with injured employees.
- Serve as the local early intervention coordinator.
- Use the CMO to assist in the identification of employees assigned to the RTW program.

31020.7.6.4 Area Return-to- Work Councils

Each institution and region shall establish an RTW Council to assist the RTWC in reviewing disability cases.

31020.7.6.4.1 Responsibility

The RTW Council shall:

- Review all cases involving injured employees who may have potential problems returning to their normal job duties.
- Discuss all claims within that institution/parole region's jurisdiction which have an Application for Adjudication pending with the Workers' Compensation Appeals Board (WCAB). This discussion develops current information to resolve disputed issues and encourage settlement.
- Determine appropriate referrals to the Early Intervention Program.

Action Plan

- Develop for each case reviewed, industrial or non-industrial, a plan of action to return the disabled employee to productive employment.

The supervisor of the injured employee, and/or person familiar with the status of the case, shall be included in the council discussions as often as possible.

31020.7.6.4.2 Membership

At minimum, the RTW Council shall consist of a person with authority to settle, a representative from personnel and safety, a SCIF claims representative, and a member from the Health and Safety Unit. The RTWC shall be the chairperson.

31020.7.6.4.3 Meetings

The RTW Council shall meet on a regular basis at least once quarterly.

31020.7.6.4.4 Minutes

Minutes of the RTW Council shall be taken by staff provided by the institution/parole region and sent to the Departmental Health and Safety Officer within ten working days following the meeting. Minutes shall be marked "Confidential" and treated as such.

Minutes shall include the following:

- Name of injured employee.
- Age of injured employee.
- Occupation at time of injury.
- Length of employment with the Department.
- Nature of injury (including brief description of how injury occurred).
- Whether claim is litigated (application filed with the WCAB).
- Whether attempts have been taken to return the employee to work and the results of these attempts.
- Plan of further action to be taken.

31020.7.6.5 Temporary Duty Assignments for Medically Restricted Staff

Temporary duty assignments for medically restricted staff are:

- Positions identified or developed for a limited time period.
- For employees with medical restrictions who cannot perform their regular duties.
- Assignments which are necessary to local operations.

Any early return-to-work for eligible employees, even in a modified capacity, has two major benefits:

- The longer employees are off work for medical reasons, the less inclined they are to return to work. Temporary duty assignments, therefore, tend to shorten the time needed to return full-time to regular assignments.
- Returning employees to work:
  - Reduces workers' compensation, industrial disability leave, non-industrial disability leave, disability insurance benefits and sick leave expenditures.
  - Results in the completion of projects/assignments normally relegated to a lower priority because of lack of staff.

The RTWC shall implement and monitor the temporary duty assignment program.

31020.7.6.5.1 Eligibility Criteria

Staff with all types of temporary disabilities including, but not limited to, sprains, fractures, pregnancies, back injuries, and stress-related disabilities shall be eligible for such temporary duty assignments as are available in keeping with their medical restrictions.

Eligible staff are those who have received medical clearance for a modified assignment from both their treating physician and the CMO of the institution in which they work or which is nearest their work location if they are P&CSD staff or Central Office staff. Their medical prognosis shall also indicate a reasonable expectation of returning to their regular assignment within 60 days.

Probationary employees shall not be eligible if they have not worked the required number of days, as specified in SPB Rule 321.

Priority shall be assigned as follows:

- Those receiving Enhanced Industrial Disability Leave (EIDL), Industrial Disability Leave (IDL), or Temporary Disability (TD) payments in regular positions requiring back-up.
- Those on IDL, EIDL, or TD with no need for back-up.
- Those on extended sick leave.
- Those on NDI.

In each category, short-term injuries/illnesses shall receive first priority.

31020.7.6.5.2 Compensation

While on a temporary duty assignment, the employee shall continue to receive the salary commensurate with the regular civil service classification.

31020.7.6.5.3 Uniforms

Uniformed staff working in a non-uniformed temporary duty assignment shall not wear their uniforms.

31020.7.6.5.4 Refusal of Assignment

Refusal to accept a temporary duty assignment by an eligible individual may result in discontinuance of IDL, EIDL, or TD benefits or placement in a non-pay status.

31020.7.6.5.5 Medical Assessment Requirements

Upon returning to work, the employee shall provide a medical release from the treating physician. The release shall detail the medical restrictions placed on the employee's return to work and shall project the time frame for return to full-time regular duties.

The CMO reviews and may concur with the assessment of the treating physician. If the CMO does not concur with the assessment of the treating physician, the CMO, with input as needed from the SPB medical officer, shall then review the case and make a decision regarding the employee's ability to return to work.

When both medical clearances have been obtained, the RTWC, with input from the employee, the employee's current supervisor, the prospective temporary duty assignment supervisor, the CMO, and other staff as directed by the hiring authority, shall develop an assignment.

The hiring authority shall review and approve the assignment plan.

31020.7.6.5.6 Monthly Medical Status Reports

The employee may be required to obtain monthly medical status reports by the treating physician and the CMO in order to return to full duty as soon as possible or to return to the previous status (IDL, EIDL, TD, NDI, sick leave or leave of absence) if the medical condition worsens.

31020.7.6.5.7 Extension of Temporary Duty Assignments

If, after the initial temporary duty period, the employee is still not able to return to full duty, the RTWC may extend the temporary duty assignment as needed, not to exceed a total of 120 calendar days. Extensions shall be granted only when there is medical justification indicating that the employee shall be able to return to full duty by the end of the extension period.

Only one such temporary duty assignment, not to exceed the maximum allowable time limits, shall be permitted the employee within a 12-month period for each specific disability.

31020.7.6.5.8 Monthly Administrative Reports

Temporary duty monthly reports on the prescribed form shall be submitted to the Departmental Health and Safety Officer by the 20th day following the end of each month.

31020.7.6.6 Identification of Temporary Duty Assignments

The Institutions Division, P&CSD, and ASD shall identify a reasonable number of temporary duty assignments. Such assignments shall be funded from existing resources consisting of IDL, EIDL, NDI, and sick leave appropriations.

The following list provides suggestions for temporary assignments, however, each assignment shall be individually assessed, with an overall consideration for the safety and security of staff, inmates and visitors. Assignments may not be appropriate and no assignment shall be viewed as mandatory.

- Academic/vocational education:
  - Teacher's Aide.
  - Tutor.
  - Curriculum developer.
  - Test corrector.
- Library.
  - Librarian.
  - Typist.
  - Filer.
  - Maintainer of paperwork displays.
  - Shelf reader.
  - Law materials.
  - Book inventory clerk.
- Auto Shop.
  - Parts chaser.
  - Mechanic assistant.
  - Gas pump operator.
- Warehouse.
  - Warehouse telephone operator.
  - Inventory forms clerk.
  - Shelves stocker.
  - Supplies receiver.
- Laundry.
  - Clothes marker.
  - Towel and sheet folder.
- Other.
  - Appeals investigator.
  - Business manager assistant.
  - Captain's clerk.
  - Caseworker assistant.
  - Classification representative assistant.
  - Community resources assistant.
  - Contraband control officer.
  - Control room officer.
  - Culinary assistant.
  - Fire department assistant.
  - Personnel office.
  - Stock clerk.

- Property officer.
- Telephone operator.
- Inmate trust office.
- Towers/observation posts.
- Hospital control desk.
- Foyer/front desk.
- Visiting room.

31020.7.6.7 Vocational Rehabilitation Training

Generally, employees disabled as the result of an industrial accident or illness shall be offered vocational rehabilitation if they cannot return to their normal and regular employment.

- The area RTWC shall meet with the rehabilitation representative to review the proposed rehabilitation program.
- The area RTWC shall provide a recommendation to the hiring authority.

31020.7.6.8 Program Evaluation

In evaluating a reduction in time, the severity rate shall be used as the measure.

CAL/OSHA Form 200

The Log and Summary of Occupational Injuries and Illnesses, CAL/OSHA Form 200 ("Log 200"), shall be reviewed by the Departmental Health and Safety Officer. This Log 200 shall be compiled by the departmental safety coordinator from data provided by institutional and regional staff. All copies of the required Log 200s shall be forwarded to the Office of Insurance and Risk Management as requested.

31020.7.7 Early Intervention

The Department is committed to implementing Early Intervention (EI) as a major component of the RTW Program to conserve fiscal and human resources.

EI ensures that all parties involved in workers' compensation cases are fully informed of available options, that decisions are reached expediently, and that action is taken to implement those decisions in a timely manner.

31020.7.7.1 Objectives

Maintain EI as a component of the RTW Program, at all institutions/parole regions and Central Office.

Return industrially injured/ill employees to work as soon as possible. Many injured/ill employees don't need referral to EI because they are receiving benefits and can be expected to return to work.

Assist the employee in locating suitable placement or request ordinary or disability retirement from the PERS if it appears that the employee cannot return to the usual and customary job.

31020.7.7.2 Reports

To ensure that EI functions properly, the following actions are necessary:

Injury Reporting

- Each institution/parole region and Central Office shall develop a system to ensure that employees and supervisors report injuries promptly (within 24 hours). In the institutions, job injuries shall be reported to the institutional personnel officer. In Paroles/Central Office, injury reports shall be submitted to the Personnel Office, Central Office. The reports ultimately shall be forwarded to the Health and Safety Unit.

SCIF Form 3067

- The local RTWC shall develop a system for reviewing accident/injury reports (SCIF Form 3067s) on a routine basis, at least weekly. The original and a copy of the forms shall be sent to SCIF and a copy to the Health and Safety Unit.
- The local RTWC shall maintain frequent communications with the SCIF adjuster and the EI counselor so that appropriate and timely decisions can be made.
- The local RTWC shall keep the Health and Safety Unit informed as to the status of the most sensitive workers' compensation cases.

31020.7.7.3 Early Intervention Counselor Visits

The Early Intervention (EI) Program provides an employee who has suffered an EI industrial injury up to two visits with a professionally trained counselor. The EI counselor provides helpful information to the employee and also assesses the ability of the employee to return to work. This assessment shall be provided to the area RTWC and the SCIF adjuster. Additional visits may be authorized by the RTWC and/or SCIF.

31020.7.7.4 Early Intervention Counselor Qualifications

An EI counselor shall usually be an experienced rehabilitation or employment counselor who has:

- Developed and implemented RTW/vocational plans.
- Evaluated, counseled, and placed vocationally handicapped individuals.

31020.7.7.5 Early Intervention Counselor Selection

The EI counselors are selected geographically for each institution by the Department and SCIF. The Health and Safety Unit shall train the EI counselors regarding specific departmental personnel policies and work rules.

31020.7.7.6 Early Intervention Counselor Role

The EI Counselor shall receive employee referrals:

- From the local RTWC.

- From a medical panel or personal physician. A medical panel is composed of local medical providers for a geographic area. A list of local medical panel members shall be posted in all work areas to assist employees in seeking medical treatment.
- From the Health and Safety Unit.
- From SCIF.

31020.7.7.7 Early Intervention Counselor Responsibility

The EI counselor shall:

- Make contact with the injured employee within two working days of referral.
- Explain all available benefit options, e.g., employment, medical, rehabilitation, retirement, etc.
- Provide reality counseling, which helps the employee adjust to the disabling condition.
- Provide reassurance to the employee that the Department is concerned about their well-being.
- Formulate an initial assessment regarding the injured/ill employee's potential for return to work.
- Provide ongoing feedback to the local RTWC and SCIF adjuster.
    - If the employee is still working, assess the job status to assure satisfactory performance and positive employee attitude.
    - If the employee is not working, assess the potential for return to work.
- Make a final recommendation to the local RTWC concerning potential work status and any work limitations.
- Be available on short notice to the following:
    - Medical panel members.
    - Business managers/local RTWCs/ institutional personnel officers.
    - SCIF adjusters.
    - Health and Safety Unit.
- Attend all local RTW meetings.
- Maintain appropriate record keeping and reporting as necessary.

31020.7.7.8 Area Medical Panel Responsibility

The area medical panel shall:

- Provide first-aid and/or medical treatment to injured employees.
- Identify employees for EI services.
- Act as consultants when employees opt to use their private physician.
- Provide medical, psychological, and psychiatric evaluations requested by SCIF.
- Evaluate the employee's potential for return to work and report to SCIF and the local RTWC.
- Maintain ongoing and frequent communications with the local RTWC and the EI counselor.

31020.7.7.9 Return-to-Work Coordinator Responsibility

The local RTWC shall:

- Serve as the local coordinator for EI.
- Ensure that ongoing and frequent communications are maintained with injured/ill employees.
- Develop a system to ensure the reporting by supervisors of all injuries or illnesses within 24 hours of occurrence.
- Review all injury/illness reports (SCIF Form 3067) on a weekly basis.
- Make necessary referrals to the EI counselor.
- Maintain frequent contact with the local SCIF adjuster and EI counselor to ensure that decisions are reached regarding injured/ill employees.
- Maintain a log of referrals to the EI counselor including decisions and conclusions regarding each referral.
- Develop a local medical panel, through use of existing community resources in conjunction with the Department's Health and Safety Office and the SCIF adjuster.
- Identify temporary, modified work assignments for the utilization of temporarily disabled employees.
- Assist with arranging employee placements of temporarily disabled employees.

31020.7.7.10 Assignment Captain/ Lieutenant Responsibility

This position is key to the EI process and shall:

- Furnish names of industrially injured/ill employees to the local RTWC for possible EI referral.
- Monitor the submission of SCIF Form 3067 to ensure the timeliness of their completion by first line supervisors.
- Participate in RTW meetings to add personal first-hand knowledge to case discussions.

31020.7.7.11 SCIF Adjuster Responsibility

The SCIF adjuster shall:

- Make referrals to appropriate medical practitioner or medical panels, especially in cases where the exact nature of the injury/illness is not readily apparent.
- Maintain medical control of the case.
- Update the claimant's medical progress with the local RTWC.
- Maintain communications with the EI counselor to monitor progress.

31020.7.7.12 Health and Safety Unit Responsibility

The Health and Safety Unit shall:

- Identify and provide specific training needs for all EI counselors and medical panels departmentwide.
- Assist each local RTWC with evaluating and monitoring the performance of all EI counselors and medical panels departmentwide in conjunction with SCIF.
- Provide training and ongoing consultation to each local RTWC for appropriate referrals to EI counselors.
- Coordinate and participate in RTW meetings with institution/regions.
- Promote the expanded use of light duty assignments where appropriate.

31020.7.8 Reports and Record Keeping

The Departmental Health and Safety Unit shall coordinate and monitor the processing of required reports.

Hiring authorities shall ensure that reports covering work-related employee accidents and illnesses are prepared and processed in accordance with all state requirements as outlined in this section.

31020.7.8.1 CAL/OSHA Record Keeping

The DIR has primary responsibility for administering CAL-OSHA. Under the program employers and employees are required to comply with specified job safety and health standards.

Enforcement is carried out by the Division of Occupational Safety and Health.

The departmental Health and Safety Unit shall compile disabling occupational injury and illness data into one report and forward it to the DGS, Office of State Insurance and Risk Management, by the 15th day following the end of each calendar quarter.

Each reporting unit shall compile the necessary information and return the following completed forms to the Department's Health and Safety Unit by the 10th day following the end of each calendar quarter.

A Log and Summary of Occupational Injuries and Illnesses, CAL-OSHA Form 200 or "Log 200" , shall be kept daily at the designated place as a basic document for:

- Collection of statistical data on annual occupational injuries and illnesses.
- Review by the Division of Industrial Safety engineer during CAL-OSHA inspections.
- Review of area accidents and occupational injury and illness experiences.

Reporting Requirements

The Log 200 shall include the recordable occupational injuries and illnesses to all paid employees, either full- or part-time. The log shall not include injuries or illnesses sustained by unpaid workers. For further detailed recording requirements refer to the booklet entitled “Record-Keeping and Reporting Requirements Under CAL-OSHA.” This booklet is available free upon request to the California Division of Labor Statistics and Research.

USINS Form 66 Retention

The Quarterly Summary of Disabling Occupational Injuries and Illnesses, USINS Form 66 summarizes the entries on the Log and Summary of Occupational Injuries and Illnesses, Log 200.

Retention

The Log 200, the associated SCIF Form 3067s and the USINS Form 66 shall be kept in the Personnel Office for five years following the year to which they relate.

31020.7.8.2 Department of Occupational Safety and Health Citations and Appeals/Variances

If the Division of Occupational Safety and Health believes that an employer has violated a safety and health standard or order, it issues a citation to the employer.

The following process is established to assure that appropriate departmental units receive immediate notification of Division of Occupational Safety and Health (DOSH) Citation Appeals and Requests for variances:

- Any citation or pending citation issued by the DOSH affecting any Department employee, facility, equipment, or operation shall immediately be brought to the attention of the departmental Health and Safety Officer. Notification shall also include:
    - Any intention to appeal a DOSH-issued citation.
    - Any intention to apply for a temporary or permanent variance to an existing safety standard.
- All citations shall be posted for a minimum of three working days and shall not be removed until the conditions cited have been abated.
- All requests for variances and appeals shall be cleared through the Health and Safety Unit. Each hiring authority shall implement a process whereby the Health and Safety Unit is notified by telecopier (within 24 hours) that there has been an inspection by DOSH and a citation is pending. Information provided in the telecopy shall include:
    - Facility or operation inspected.
    - The location.

- The date of inspection.
- Description of pending citation(s) including specific safety orders allegedly violated.
- Classification of pending citation, if known (serious or non-serious).
- Tentative reason to appeal or not appeal.

Process to Notify Health and Safety

- The Health and Safety Unit shall inform appropriate Central Office units of citations, citation appeals, or variance activity.
- All employees shall be advised of and understand their basic rights and liabilities with respect to serious industrial accidents and the appropriate response to DOSH questions.
  - It is an employee's right to refuse to answer questions, make statements, or otherwise discuss the facts of an industrial accident with the DOSH investigators until the employee has had an opportunity to talk to an attorney. The Department's Legal Affairs Branch has recommended that no employee discuss the facts of any serious or fatal accident unless an attorney representing the employee is present during questioning.
  - This policy is not intended to prevent DOSH from carrying out its responsibility to investigate on-the-job accidents. It is, however, intended to assure employee awareness of their rights and potential liabilities in cases where questioning, as a part of an investigation, can lead to serious criminal charges.

Employee Accident Reporting

- Employees who have participated in activities related to a serious on-the-job accident shall see that the notification of the accident is immediately communicated to the local safety coordinator and the Central Office Health and Safety Unit. Employees may request advice, representation or both from the departmental counsel, or may consult with a private attorney at their own expense.

31020.7.8.3 Accident Reporting

Report of Vehicle Accident, STD Form 270

Whenever a State-owned vehicle or a privately-owned vehicle driven on State business is involved in an accident, the driver of the vehicle shall complete and submit a Report of Vehicle Accident, STD Form 270 within 48 hours to the DGS, Office of Insurance and Risk Management, 926 J Street, Suite 615, Sacramento, CA 95814, (916) 322-8966.

When the accident involves a privately-owned vehicle or a commercial automobile, the STD Form 270 shall be clearly marked "Privately-Owned Vehicle Involved".

When a State vehicle is struck while properly parked, the custodian of the vehicle shall complete and sign only that portion of the STD Form 270 identifying the custodian, vehicle, the location, and probable date and time that damage occurred.

All questions on the form shall be answered. If the question is not applicable, place a dash or “N/A” in the answer area.

The supervisor who authorized the use of the vehicle shall ensure that the STD Form 270 is completed by the driver or, if that person is unable to do so, the supervisor shall complete the form. When a driver is unable to complete the form, the supervisor shall notify the liability insurance company and forward STD Form 270 to the DGS within 48 hours of the accident.

Distribution of the STD Form 270 is dependent upon the type of vehicle involved in the accident as follows:

Department-Owned Vehicles

- White, blue, and pink copies shall be sent to the DGS, Office of Insurance and Risk Management, 926 J Street, Suite 615, Sacramento, CA 95814. Forward the canary and green copies to the supervisor who authorized the use of the vehicle.

State Garage Vehicles, Pool or Monthly Tripper

- White, blue, and pink copies shall be sent to the DGS, Office of Insurance and Risk Management, 926 J Street, Suite 615, Sacramento, CA 95814. Forward the green copy to the State Garage which dispatched the vehicle and the canary and one added copy to the supervisor who authorized the use of the vehicle.

Privately-Owned or Commercial Vehicle

- White and blue copies shall be sent to the DGS, Office of Insurance and Risk Management, 926 J Street, Suite 615, Sacramento, CA 95814. Forward the pink copy to the driver (in case of inmate driver, this shall be retained at the local level) and the canary and green copies to the supervisor who authorized the use of the vehicle.

Claim for Reimbursement

Note:: Whenever an employee submits a claim for reimbursement of repair expenses, a copy of the STD Form 270 shall accompany the travel expense claim, STD Form 262. (See SAM 759 and 759.5 for terms of reimbursement.)

Review of State Driver Accident, STD Form 274

Upon receipt of a completed Report of Vehicle Accident, Form 270, the supervisor of the driver involved in the accident shall initiate, in duplicate, the Review of State Driver Accident, STD Form 274.

Police Report

The supervisor shall interview the driver of the vehicle and investigate at the scene of the accident when necessary. A copy of the police accident report shall be obtained and made part of the supervisor's review.

Upon completion, two copies of the STD Forms 270 and 274, and related police reports shall be routed as follows for management review:

- Institutions - institutional safety coordinator.
- Paroles - regional safety coordinator.
- Central Office - Health and Safety Unit.

A copy of the original package shall be retained at the local level.

Management review shall ensure completeness of reporting and initiate follow-up action if it is determined that there is evidence of misuse or negligence considerations on the part of the State driver.

Driver Training and Evaluation

Defensive driver training is coordinated by the DGS and is considered job-required training. Supervisors' requests for training shall be handled as described in the SAM 750.2, and problems with this process or scheduling shall be directed to the Departmental Training Officer.

Corrective Action

Whenever managers or supervisors observe a subordinate employee operating a vehicle in an unsafe manner, even though an accident does not occur, corrective action shall be taken.

Assessment of damages shall be made against an employee for damage or loss because of abuse or negligent use of the vehicle in accordance with the SAM Section 4182.3.

Any preventive, corrective, or formal disciplinary action taken shall be in accordance with the following:

- GC 19574.
- Departmental policy.
- SAM Section 4182.3.

Employee's Responsibility

Employees shall:

- Report any motor vehicle accident or damage within 48 hours.
- Attend defensive driver training classes scheduled by supervision.
- Obey the law and follow the instructions and guidelines described in this and other pertinent departmental policy.

First-Line Supervisor's Responsibility

The first-line supervisors shall:

- Ensure accidents are promptly reported and investigated.
- Initiate counseling and corrective action for those employees who have demonstrated a poor driving record.
- Consider accident records in the annual employee appraisals.
- Notify the training officer when an employee needs to take a defensive driver training class.
- Instruct subordinates regarding driving responsibilities prior to authorizing them to drive on State business.

Second-Line Supervisor's Responsibility

Second-line supervisors shall:

- Review and classify each motor vehicle accident within their span of supervision.
- Verify the vehicle accident classification and preventability designation.
- Ensure first-line supervisors initiate appropriate corrective action in accordance with departmental policy.

Inspecting Car Pool Vehicles

Before removing a State vehicle from the car pool or upon reassignment, the operator shall check the vehicle for any obvious damage. If any damage to a State vehicle is not reported prior to removal from the pool or reassignment, the responsibility shall be placed upon the last operator of that vehicle.

Any damage to State vehicles noted during the inspection, or while in use, shall be reported on a STD Form 270 by the driver at the first opportunity, even if the time and cause of the defect are unknown. The filing of such a report does not imply that damage was caused by the driver who signs the report.

The institution/parole region/division shall not accept any excuse for non-reporting of vehicle damage. All operators of State vehicles are accountable for the care of and reporting of any vehicles assigned to them.

All personnel shall be made aware of this process. It shall be used to clarify any questions concerning the responsibility for reporting and accountability of any State vehicle while in their possession.

Summary Report of State Driver Accidents

A Summary Report of Departmental Vehicle Accidents shall be submitted annually to the DGS, State Driver Accident Prevention Program. The report shall be compiled by the Department's Health and Safety Unit using specific data obtained from each reporting unit.

31020.7.8.4 Non-Vehicular Accidents Involving

Inmates

Accident Report (Other Than Motor Vehicles), STD Form 268 shall be used in reporting all accidents involving the public, which either occur on State property or involve State employees or equipment. Only in case of serious injury or death of an inmate where there is a possibility of liability to the State shall inmate accidents be reported on STD Form 268.

In the event of an accident or occurrence other than motor vehicle involving the public which results in death, serious injury, or extensive property damage, immediately telephone the AG’s Office in Sacramento and provide the following information:

- The identity of the Department, the particular unit, and employee(s) involved.
- The time, place, and circumstances of the accident or occurrence.
- The names and addresses of the injured.
- The names and addresses of witnesses, if any.

Reporting

To report incidents on Saturdays, Sundays, or holidays, telephone the State Capitol Operator at (916) 445-4711 and provide the required information. The operator shall relay messages to the designated duty officer for the AG's Office. After the telephone report has been made, STD Form 268 shall be submitted:

Distribution of STD Form 268

- Original and first copy within 48 hours to the AG's Office, Tort Section, P.O. Box 944255, Sacramento, CA 94244-2550.
- Second copy to the Office of Insurance and Risk Management, 926 J Street, Suite 615, Sacramento, CA 95814.
- Third copy to the Department's Health and Safety Unit.
- Fourth copy for local use.

31020.8 Health and Safety Grievance Procedure

The Department provides reasonable safeguards for the protection of the health and safety of all employees. However, to ensure a prompt response should employees feel that a situation exists which presents an immediate danger and wish to file a health and safety grievance, they are directed as follows:

- Rank and file employees may review individual guidelines in the applicable bargaining unit contracts.
- Excluded employees (manager, supervisor, confidential) may follow procedures in Section 33010, Personnel Policies, of this manual.

Health and safety issues under this process include the following:

- Unsafe structural conditions;
- Defective or unsafe electrical or mechanical equipment;
- Environmental hazards;
- Deficient vector control; or
- Violations of acknowledged custodial rules or procedures which imminently threaten the safety of any individual or the work site.

All should be aware of rights and obligations under these contracts and personnel policies including the time frames for specific action.

31020.9 Revisions

The Deputy Director, ASD, or designee shall ensure that the content of this section is accurate and current.

31020.10 References

CCR (8) General Industry Safety Orders.

ACA Standards 2-4162 through 2-4175, 2-4047, 2-4134, 2-4244, 2-4255, 2-4305, and 2-4416.

Governor Executive Order R29-71.

SAM §§ 2580 - 2595.1, 190.

Personnel Transaction Manual § 656.

LC §§ 6200 - 6208, 6409 - 6413, 10017.

CCR (2) §§ 555 - 555.4.

CCR (15) §§ 3289 and 3413.

GC §§ 19253.5, 19853; 13959 - 13969.1; 13970 - 13974.

DOM § 52090.

DPA Rules 599.755 - 599.768; 599.769; 599.770 - 599.779; 599.737; 599.738; 599.742; 599.742.1; and 599.752.

ARTICLE 3 — EMPLOYEE AWARDS PROGRAM

Effective February 7, 1990

31030.1 Policy

The Department encourages all employees to actively participate in the following awards programs:

- State Merit Award Program
- Employee Recognition Program
- Safety Awards Program

31030.2 Purpose

This section provides standards and procedures for participation in the State Merit Award Program, the Employee Recognition Program, and the Safety Awards Program.

31030.3 State Merit Award Program

The State Merit Award Program (which is synonymous with the Employee Suggestion Program) was established to improve the operations and efficiency of state government by honorary and cash awards. The objectives of the program are:

- To encourage all employees to take an active part in improving the effectiveness of our state government.
- To provide recognition for those employees whose individual or group efforts contribute to efficiency and economy through elimination or avoidance of state expenditures, or other improvements.
- To reward employees for acts or services of an outstanding nature.
- To reward employees for superior accomplishments.

Awards

The Merit Award Board determines and makes cash awards proportionate to the value of adopted suggestions.

31030.3.1 Responsibility

Merit Award Administrator

The Department's Merit Award Administrator who is headquartered at Central Office in the Contract and BSS shall:

- Explain and interpret the program to departmental employees.
- Supervise the distribution of Merit Award Program material issued by the Governor, the DPA, or the State Merit Award Board.
- Assign suggestions to qualified employees, or to the institution or parole region suggestion coordinator, for investigating and evaluating those suggestions referred to the Department by the State Merit Award Board.
- Assure that there are prompt and impartial evaluations of employee suggestions, review the Evaluation Reports, and return completed evaluations to the State Merit Award Board.
- Assure that the Department's managers are made aware of adopted suggestions that increase departmental economy or efficiency, or improve operating procedures.

Assistance Offered

Employees, supervisors, and institution/parole region suggestion coordinators are encouraged to contact the Merit Award Administrator for:

- Additional information on the program.
- Answers to questions.
- Arrangement for speakers to explain the program to employee groups.

Institution or Parole Region Suggestion Coordinator

The associate wardens, business services, and the deputy RPAs are the suggestion coordinators of their institution/parole region. They shall assign suggestions to qualified employees and ensure a prompt reply and complete evaluation of suggestions submitted to their institution/parole region.

Evaluators

Qualified employees selected by the Merit Award Administrator or the institution’s or parole region’s suggestion coordinator shall:

- Evaluate objectively and completely all assigned suggestions using the Merit Award Board's Evaluator's Handbook and the Evaluation Worksheet Guide. Evaluators should have a complete understanding of each submitted idea in order that this may be accomplished.
- Complete two typewritten copies of the Evaluation Report, DPA Form 060F with sufficient detail to enable the State Merit Award Board, which does not have detailed knowledge of the operations involved, to make an objective decision regarding the award.
- Base the evaluation on the best method available, such as:
    - Personal knowledge.
    - Advice of subject matter experts.
    - Study by staff assignment.
    - Trial use of the proposed suggestion.
- Make a definite recommendation either for adoption or rejection of the suggestion. Appropriate comments necessary to substantiate the recommendation shall also be included.

- If the evaluator has the authority to adopt or reject the suggestion and place it into effect, proceed with the necessary actions to place accepted suggestions into operational use.
- If the evaluator does not have the authority to adopt or reject the suggestion and place it into effect, complete the Evaluation Report, including recommendations, and return it to the Merit Award Administrator with the name and title of the individual to whom the suggestion should be submitted for decision and implementation.

Supervisors

Each supervisor shall:

- Maintain the impetus of the Merit Award Program.
- Encourage the submission of suggestions.
- Be thoroughly familiar with the details of the program as specified in the SAM.
- Provide assistance to suggesters when requested and may, in certain instances, cooperate with suggesters and share in the award.

31030.3.2 Acceptable Suggestions

Suggestions which are solicited and acceptable are for methods of:

- Saving: Manpower, money, materials, time, and/or space.
- Improving: Methods, quality, service, working conditions, employee morale, and/or safety conditions.
- Devising: New equipment, methods, and/or applications.
- Eliminating: Spoilage, breakage, duplication, and/or waste.
- Reducing: Material costs, labor costs, service costs, safety hazards, and/or time of processing.

31030.3.3 How to Submit Suggestions

An employee desiring to submit a merit award suggestion shall complete one copy of STD Form 645, Employee Suggestion and send it directly to the Merit Award Board, 1115 Eleventh Street, Sacramento, CA 95814-3860.

31030.3.3.1 Availability of Forms

Copies of these forms shall be stocked by all departmental divisions, parole regions, and institutions. Central Office divisions needing copies of these forms for distribution may obtain them through the Contract and BSS; institutions and parole regions may obtain them through normal forms supply channels.

31030.3.3.2 Guidelines for Submission of Suggestions

The following guidelines are to assist employees in submitting their suggestions so that they may be given the best possible consideration:

- Write only one suggestion on each form.
- State the suggestion fully, clearly, and concisely with the problem described and a solution offered. Be specific. Use additional sheets of paper if more space is required to make the suggestion complete.
- Attach a sketch or drawing illustrating the suggestion if this provides a better understanding.
- Include calculations to show how many times per day, month, or year the form, procedure, or idea being suggested could be used.
- If the employee finds it difficult to express the idea clearly, the employee is encouraged to ask a supervisor for assistance in preparing the suggestion.

31030.3.3.3 Cash Award for Supervisor

A cash award may be paid to the immediate supervisor of an employee whose adopted idea results in proven monetary savings in excess of $1,500, if both the employee and the supervisor have indicated in writing upon the initial presentation to the Merit Award Board that, although the basic idea was originally conceived by the employee, the supervisor proposed the procedure or idea in association with the employee. The Merit Award Board shall evaluate the supervisor's contribution and may recommend an award to the supervisor, not to exceed three percent of the net annual savings.

31030.3.4 Time Limits for Completion of Evaluations

Suggestions shall be promptly evaluated. The following time limits shall be met, unless a detailed investigation requires additional time:

Time Limit	Action
Within two working days of receipt of an evaluation request from State Merit Award Board	Merit Award Administrator refer shall request to institution or parole region suggestion coordinator or qualified employee for evaluation.
Within three calendar weeks of referral by Merit Award Administrator	Institution or parole region suggestion coordinator or qualified employee shall either return the completed and typed evaluation to the Merit Award Administrator, **or** indicate on the form from the Merit Award Administrator the date by which the evaluation shall be completed and return the form to the Merit Award Administrator if the three-week time limit cannot be met.

31030.3.5 Overdue Evaluations

The Merit Award Administrator shall maintain a log of suggestions being evaluated and shall follow-up on overdue evaluations.

31030.3.6 Evaluation Guidelines

Evaluate the suggestion promptly and objectively. Evaluate the suggestion, not the suggester. Look for ways to get the maximum benefit from the suggestion.

Take into account the suggester's feelings.

Describe in reasonable detail if savings are tangible and indicate the method of calculation. Cost of adoption may be prorated over the life of the improvement in arriving at the first year's net savings.

Be courteous and tactful. Avoid offending the suggester or discouraging future suggestions. Comments shall reflect a positive approach, and indicate that all possibilities were considered. Indicate to the employee that the time taken to send in the idea is appreciated and that, even though the suggestion was not adopted, suggestions are always welcome.

- Appropriate opening sentence: "Mr./Ms. _____'s proposal appears to have been given a great deal of thought and is well developed, but for the following reasons is not recommended for adoption at this time":
- Appropriate closing sentence: "While we are not able to adopt this suggestion (for the above reasons), we want Mr./Ms._____ to know that we appreciate the effort and we hope for the continued submittal of constructive ideas."

A copy of each evaluation is forwarded to the suggester, without the name of the evaluator.

31030.4 Employee Recognition Program

The Employee Recognition Program was established to acknowledge those employees and community members who distinguish themselves by acts of heroism, bravery, or service beyond the normal demands of correctional/community service.

31030.4.1 How to Submit Nominations

An employee may be nominated for a departmental award by any supervisory employee. Supervisors have a duty to recognize heroic acts. A written memorandum shall be submitted to the hiring authority for approval. The nominee shall have acted while on duty, or, if off duty, while in a departmental facility.

The memorandum with the hiring authority's comments shall be forwarded to the appropriate deputy or assistant director for approval. The deputy or assistant director shall then review and forward all nominations to the Assistant Director, Communications.

The Employee Recognition Program operates on a calendar year basis. All awards for nominations submitted for which the incident occurred between January 1 and December 31 of each year are presented in May of the following year.

Nominations are due to the Assistant Director, Communications, on the first Friday after January 14 following the year in which the incident occurs. All nominations shall include:

- A standardized cover sheet provided by the communications office. The cover sheet will include names of nominees, date of incident, brief description of incident (not to exceed space provided), name and signature of person making nomination, institution/parole region/other work location, and employee position or rank.
- A formal letter or memorandum of nomination from the employee's supervisor, or Warden/RPA/deputy director, not to exceed one side of one page.
- One to three one-sided sheets (8 1/2 x 11) of additional or substantiating material (incident reports, statements of eyewitnesses, etc.) may be used. The nominating package will total no more than five single-sided sheets of materials for any nominee.

The nomination package must be sent by USPS or delivery service (No telefaxed materials will be accepted unless specific information is requested by the Communications Office) so that arrival is prior to the due date.

The due date will be determined prior to December of each year. All Wardens/RPAs/deputy directors will be notified in early December of the deadline which will be 5:00 p.m. on the first Friday after January 14.

31030.4.2 Departmental Awards Review Board

The Departmental Awards Review Board consists of the following:

- Chief Deputy Director (Chairperson).
- Deputy Director, Institutions Division.
- Deputy Director, P&CSD.
- Deputy Director, ASD.
- Two Wardens.
- One RPA.

The Wardens and the RPA are selected by the Director for two-year terms.

The Board shall meet annually no later than the end of February, or as frequently as deemed necessary by the Chief Deputy Director. The Board shall make its recommendations from the prior calendar year's nominees to the Director, who shall make the final decision.

The Assistant Director, Communications, shall serve as the chief staff member for the Departmental Awards Review Board and shall ensure that all seats are properly filled, a sufficient number of meetings are scheduled, and appropriate individuals are in attendance.

31030.4.3 Presentation of Awards

Awards, with the exception of the Community Service Awards, shall be presented annually by the Governor, or his representative, and the Director, at publicized ceremonies. Community Service Awards shall be presented by the Warden/RPA at the prison/parole region.

31030.4.3.1 Corrections Community Service Award

The Corrections Community Service Award is presented on behalf of the Director to members of the community who have worked diligently and capably on behalf of the Department. Each prison/parole region may award one Community Service Award at their discretion.

31030.4.4 Wearing of Awards

Uniformed employees shall wear awards in accordance with Section 33020 of this manual.

Non-uniformed employees are permitted to wear the lapel pin replicas of awards received.

31030.4.5 Awards – Descriptions and Criteria

Medal of Valor

The Medal of Valor is the Department's highest award, earned by employees distinguishing themselves by conspicuous bravery or heroism above and beyond the normal demands of correctional service. The employee shall display great courage in the face of immediate life-threatening peril and with full knowledge of the risk involved. The act should show professional judgment and not jeopardize operations or the lives of others.

- The medal consists of a gold-color medallion on a red, white, and blue ribbon.
- With the medal, the employee receives a red, white, and blue ribbon for wear with the Class A uniform and a lapel pin replica of the medallion for wear with civilian attire.

Corrections Star (Gold)

The Corrections Star (Gold) medal is the Department's second highest award for heroic deeds under extra-ordinary circumstances. The employee shall display courage in the face of immediate peril in acting to save the life of another person.

- The medal consists of a gold-color medallion in the shape of the departmental badge on a blue and white ribbon.
- With the medal, the employee receives a blue and white ribbon for wear with the Class A uniform and a lapel pin replica of the medallion for wear with civilian attire.

Corrections Star (Silver)

The Corrections Star (Silver) medal is the Department's third highest award for acts of bravery under extra-ordinary or unusual circumstances. The employee shall display courage in the face of potential peril while saving or attempting to save the life of another person or distinguish him/herself by performing in stressful situations with exceptional tactics or judgment.

- The medal consists of a silver-color medallion in the shape of the Department badge on a red and white ribbon.
- With the medal, the employee receives a red and white ribbon for wear with the Class A uniform and a lapel pin replica of the medallion for wear with civilian attire.

The Corrections Star (Bronze) medal is the Department's award for saving a life without placing oneself in peril. The employee shall have used proper training and tactics in a professional manner to save, or clearly contribute to saving, the life of another person.

- The medal consists of a bronze-color medallion in the shape of the departmental badge on a gold and white ribbon.
- With the medal, the employee receives a gold and white ribbon for wear with the Class A uniform and a lapel pin replica of the medallion for wear with civilian attire.

Distinguished Service Medal

The Distinguished Service Medal is for an employee's exemplary work conduct with the Department for a period of months or years, or involvement in a specific assignment of unusual benefit to the Department.

- The medal consists of a bronze-color medallion presented on a green and white ribbon.
- With the medal, the employee receives a green and white ribbon for wear with the Class A uniform and a lapel pin replica of the medallion for wear with civilian attire.

Unit Citation

The Unit Citation is for great courage displayed by a departmental unit in the course of conducting an operation in the face of immediate life-threatening circumstances.

- The award consists of a letter from the Director to the unit commander outlining the specific circumstances of the award. Copies shall be placed in each unit member's personnel file.
- Recipients shall also receive a green and gold ribbon for wear with the Class A uniform.

Corrections Community Service Award

The Corrections Community Service Award is presented on behalf of the Director to members of the community who have worked diligently and capably on behalf of the Department.

- The award consists of a certificate.

The Richard A. McGee, Sr. Memorial Award is presented to the spouse or family of a peace officer employee who died from injuries sustained during the performance of official duties.

- The award consists of the officer's badge presented in a picture frame and an appropriate letter from the Director.
- Other additional recognition may be awarded posthumously as appropriate.

31030.5 Safety Awards Program

The Safety Awards Program was established to promote employee awareness in health and safety through recognition of significant employee contributions and achievements.

31030.5.1 Vehicle Safety Awards

The Department's annual goal for a lower number of accidents involving vehicles driven on State business is expressed as a percentage of reduction in the frequency rate of vehicle accidents. Qualifying institutions, parole regions, and the Department's Transportation Unit shall receive awards for achieving the goal.

- The departmental goal shall be obtained from the “Annual Report of the California State Workers' Compensation and Program”, published by the DGS.

- Awards shall be made for each calendar year and shall be presented on or before June 15th of the following year.

31030.5.2 Personnel Safety and Health Awards

Institutions/ Parole Regions

Each qualifying institution and parole region which achieves the injury frequency and severity rate goals established by the Health and Safety Unit, Central Office, shall receive recognition with the presentation of annual awards no later than June 15th of the following year.

- The goals are based upon the departmental injury frequency and severity rate goals set by the State Safety Advisory Committee.
- The formulas used in computing the frequency and severity rates for the Department and for each institution/parole region are as follows:
  - Frequency rate = total number of injuries x 200,000 work hours : total number of work hours.
  - Severity rate = total number of days lost x 200,000 work hours : total number of work hours.
- The Department's annual goals for the reduction in frequency and severity rates of disabling injuries and illnesses shall be forwarded in a memorandum from the Chief Deputy Director to each institution and parole region every January.

Departmental Award to Individuals

Departmental Employee Safety Awards shall recognize significant contributions to and/or achievements in the health and safety program.

- Eligibles: Employees from each institution, parole region, and Central Office.
- Selection: Each local safety committee shall submit the names of those who were selected to receive the local employee safety awards on the Nomination Form for Safety Award to the Warden; RPA; or Assistant Deputy Director, Human Resources Management, for approval.
- Submission: The approving authority shall ensure that local award recipient's nomination forms arrive at the Department's Health and Safety Unit by January 15th each year. The Chief, Health and Safety Unit, or designee, shall arrange for selection and presentation of departmental awards.

Governor's Award to Individuals

Employees of all state agencies are eligible to receive the Governor's Employee Safety Award. The Department may nominate for the award its quota of individuals as established annually by the Office of Insurance and Risk Management, DGS.

The name(s) of those Department Employee Safety Award recipients who meet the Governor's Employee Safety Award criteria shall be forwarded to the Office of Insurance and Risk Management for consideration by the Safety Awards Committee.

The award ceremony is held annually at the State Capitol, and the awards are presented by members of the Governor's staff. The date of the ceremony is established each year by the Office of Insurance and Risk Management.

31030.6 Revision

The Deputy Director, Administrative Services, or designee, shall ensure that the content of this section on the Merit Award Program and the Safety Awards Program is current.

The Assistant Director, Communications, shall ensure that the content of this section on the Employee Recognition Program is current.

31030.7 References

SAM § 4700 et seq.

ARTICLE 4 — VOLUNTEERS*

Effective February 7, 1990

Not Cleared For Statewide Use

31040.1 Policy

The Department shall maximize the interaction of varied cultural and socioeconomic members of the community through their use as volunteers.

31040.2 Purpose

This section establishes objectives, standards and operational procedures for the use of volunteers.

31040.3 Definition

Revised November 9, 1990

Volunteers are persons who provide a service to the Department without expectation of remuneration.

Volunteers who provide services on an ongoing basis should be called long-term volunteers. Services provided by long-term volunteers are performed under supervision and are subject to performance requirements.

Persons who voluntarily perform a service for the Department on a temporary basis, such as to volunteer their talents for an entertainment show or participate in an athletic event, should be called short-term volunteers.

31040.4 Objectives

The objectives of the volunteer program are:

- To increase participation in correctional programming.
- To actively encourage inmate/parolee interest and participation in available programs.
- To contribute towards the public's accurate knowledge of the Department's operations.
- To provide a needed interchange between the community and the Department.

31040.5 Responsibility

Hiring Authority

Wardens and RPAs (hiring authority) administer volunteer programs consistent with this policy.

- Provides appropriate and sufficient numbers of employees for the effective development, coordination and supervision of volunteer activities and programs.
- Delegates overall responsibility for the Volunteer Program as follows:
  - Institutions: To the community resources manager (CRM).
  - P&CSD: To the RPA, or designee.
  - Central Office: To the Assistant Director, CRD or designee.
- Recruits new volunteers and develops volunteer/community programs in accordance with identified and prioritized needs of the location.
- Makes a positive effort, when appropriate, to recruit persons who are under-represented in terms of affirmative action goals.
- Reviews and approves the use of volunteers or outside resources in any local program when consistent with the goals and objectives of the Department.
  - Coordinates the screening and interview of prospective volunteers.
  - Obtains CI&I SSCH
  - Ensures that no security risks exist.
  - Accepts verification of certificates or licenses if professional services are offered.
  - Requests the issuance of identification cards for citizen volunteers.
- Maintains an index card file or roster identifying all volunteers, their hours of participation, duties and area of work.
- Develops policy governing job descriptions, recruitment, screening, training responsibility, and use and supervision of volunteers in conjunction with division heads, IST, managers and sponsors.
- Evaluates the use of volunteers and the volunteer program on a regular basis to ensure:
  - Volunteer efforts compliment the activities of staff.
  - Selected volunteers are physically, mentally and emotionally able to provide the desired service.
  - Compliance with this section.
  - That all volunteers receive an orientation of the Department and their assigned location.
  - That incoming inmates and parolees returned to custody are encouraged to participate in the development of volunteer/community programs and are informed of these activities during their initial orientation.
  - Posts in conspicuous and accessible areas a current schedule of volunteer services, where available, and a contact person. This information shall be updated at least every six months when changes occur.
- Submits a quarterly report to the Assistant Director, CRD, which includes:

- Number of volunteers.
- Number of hours of volunteer activity.
- Summary of added/discontinued programs.
- Review of special events.
- Summary of community contacts.
- Review of procedural/administrative difficulties.

Institution/ Division Heads/PAs

- Identify program areas where community resources are needed.
- Directly solicit citizen volunteers and community programs to meet needs, coordinating such activity in an institution with the CRM.
- Approve all volunteer duty statements or community program agreements operating within their program area.
- Participate in screening, interviews, orientation, evaluation and approval of volunteers when requested.
- Ensure that the number of volunteers and volunteer hours are reported monthly to the CRM.

Personnel Office

- Arrange for fingerprints and photographs.
- Maintain personnel file for volunteers who receive identification cards.

Local Training Officer

- Provide a minimum of four hours orientation and training to include staff/inmate relations, emergency procedures, IPA and a tour.
  - Infrequent volunteers may be oriented by their supervisor/sponsor with the approval of the CRM/RPA.

Supervisor/ Sponsor

- Develop all volunteer duty statements within their program area.
- Determine the specific services the volunteer is to provide and communicates this information to the volunteer.
- Take actions as are necessary to ensure that volunteers understand their duties and responsibilities.
  - Coordinate or conduct any necessary training so that the volunteer is familiar with CCR and is able to fulfill the requirements of the position.
  - Notify the volunteer of any changes in rules/procedures or in their duties/responsibilities.
  - Reviews with the volunteer the Digest of Laws Related to Association with Prison Inmates, CDC Form 181 ; ensures understanding of the material and answers any questions.
- Directly supervises all volunteers in the supervisor's program area on a day-to-day basis.
  - Maintain attendance records on each volunteer using state time reporting forms showing the number of hours and days worked each month.
  - Report the number of hours and days worked each month to the CRM.
  - Record on the timekeeping form the number of inmates participating in each volunteer activity which involves a direct service to inmates.
- Ensure that the volunteer has an approved volunteer identification card or gate clearance. Renew these items when necessary and retain them upon expiration.
- Encourage volunteers to participate in IST programs and staff meetings.

Volunteer

- Performs the agreed upon service adequately, carefully and diligently without the expectation of pay or allowances.
  - Asks supervisors to explain duties.
  - Seeks clarification of unclear items.
- Agrees in writing to abide by Department policies.
- Completes satisfactorily:
  - Screening requirements.
  - Required forms/photograph/fingerprinting.
  - Orientation.
  - Verification of possession of credentials/licenses if a professional service is offered.
  - Annual evaluation.
- Reports to a higher level supervisor any information which may affect the safety and welfare of volunteers, employees, inmates/parolees, the program, or the community.

31040.6 Appointment Standards

Approval for a volunteer position or a new community program shall be based on:

- Need of service offered.
- Qualifications of individuals offering service.

- Background clearance of individuals participating.
- Time and frequency of service offered.
- Space and employees needed for proper supervision.

New Position Approval

New volunteer positions or programs require the review and approval of the hiring authority before implementation.

Initiating Requests

Requests for volunteer positions are initiated as follows:

- Citizens shall submit a letter to the hiring authority; or,
- Sponsors shall submit a volunteer duty statement or Volunteer Service Agreement, CDC Form 966-A, to the appropriate authority:
  - Institution program head; or,
  - PA; or
  - Assistant Director, CRD.

Requirements of Sponsors

Primary group sponsors shall be full-time employees. Citizen volunteers may be used as co-sponsors under the supervision of full-time employees.

Retired departmental staff may be used if they achieved retirement under medical or longevity conditions. Other departmental retirees shall be reviewed and approved by the hiring authority prior to acceptance.

Upon approval of the position and selection of a potential volunteer, the sponsor shall escort the individual to the personnel office for completion of required documents and initiation of the screening process.

31040.6.1 Screening

The same general practices, methods, and procedures used to select employees shall be used in screening volunteers.

- Basic educational background and work experience information shall be obtained.
- An interview shall be conducted.
- Credentials/certificate status of volunteers performing professional services shall be verified.
  - Tutoring or sponsorship of a craft or hobby program is not considered a professional service.

31040.6.1.1 Relatives and Visitors

Inmate relatives [as defined in CCR 3174(a)] and inmate visitors shall not be considered nor allowed to become volunteers.

31040.6.2 Volunteer Files

Revised April 7, 1994

A file similar to the official employee personnel file shall be maintained on each volunteer. At a minimum, the file shall include the following:

- CDC Form 181, Digest of Laws Related to Association With Prison Inmates (Exihbit A).
- CDC Form 966-A, Volunteer Service Agreement .
- CDC Form 1049, Volunteer Participation Form .
- Standard (STD) Form 689, Oath of Allegiance .
- STD Form 610-HQ, Health Questionnaire .
- CDC Form 894, Emergency Notification .
- STD Form 261, Authorization to Use Privately Owned Vehicles on State Business .
- Statement acknowledging receipt of a copy of the CCRs and the IPA.

A separate record of each volunteer's name, address, and telephone number shall be kept in one of the following:

- Index card file.
- Register.

Unless litigation is pending, these records shall be destroyed as follows:

Index Card

Six months after the last date on which a service was provided by the volunteer.

Register Page

Six months after the last date on which a service was provided by any volunteer whose name appears on the page.

31040.6.3 Security Clearance

Revised April 7, 1994

Prior to appointment, each volunteer shall satisfactorily complete the following security clearance.

- Volunteer issued identification cards:
  - A CI&I check shall be processed. Additionally, fingerprint cards shall be taken and shall be processed through State DOJ if it is determined by the Investigative Captian to be necessary for a security clearance.

- Volunteers issued gate clearances only:
  - A CI&I clearance by CLETS shall be processed. Fingerprints shall not be required under normal circumstances.

Security clearance shall be renewed on an annual basis.

Ex-Felons

Volunteers who are ex-felons shall additionally be required to have the written approval of the hiring authority prior to admittance for participation in activities or programs.

- If the volunteer is on parole or probation, the written approval of both the caseworker and the hiring authority is required.

Identification Cards

Volunteers shall be issued identification cards for approved ongoing volunteer activities which will occur on a frequent long-term basis - a minimum of six months with a frequency of more than one visit per month.

- Those who are involved with only one institution shall be issued a card by the specific Warden.
- Those who are involved with more than one institution and/or function shall be issued cards signed by the Assistant Director, CRD.

In institutions, gate clearances issued for each visit are used for individuals or groups providing occasional volunteer services, such as outside ball teams, visiting religious groups, and entertainment groups. (See DOM 31070, Personnel Identification Cards.)

Institutions - Gate Clearance

Gate clearance for outside guests shall be approved by the hiring authority or designee.

- The entrance gate officer shall be provided with a written gate clearance for outside guests.
- All outside guests shall have an identification document with a picture, (i.e., valid driver's license; Department of Motor Vehicle identification card; or other official, valid, positive identification).
- Guests may be issued a temporary gate pass. They shall be processed through the metal detector and allowed to proceed to their destination with an escort.
- The senior manager on duty (e.g., watch commander, 3rd watch) may suspend prior approval with good cause (e.g., failure to adhere to Department rules/regulations). In such cases, a report explaining the reasons shall be routed to the hiring authority with a copy to the CRM.
- An approved volunteer under the age of eighteen years shall be accompanied by an authorized responsible adult.

31040.7 Volunteer Orientation

Orientation shall be completed prior to assignment as a volunteer.

- Volunteers shall attend the existing orientation offered at the assigned location.

At a minimum, orientation shall consist of:

History

- History and policies of the Department and the assigned location.
- Notification of the provisions of the worker's compensation fund.

Programs

- Overview of the existing programs so that volunteers may develop a sense of their role in relation to other programs, including the work incentive program.

Duties

- Description of the volunteer's duties, lines of communication, supervision, and accountability. Public safety shall take precedence over all other considerations in the operation of the programs and activities of the Department.

Service Population

- Review, in general terms, of the needs, attitudes, and lifestyles of the inmate population.

Rules

- Notification that volunteers are subject to the rules and regulations established by the hiring authority and the Director.
  - Information on the pertinent rules affecting the security of the institution/parole office/unit and the safety of volunteers, employees, and inmates/parolees.

Confidential Information

- Explanation of the IPA provisions.
  - The confidentiality of records and other privileged information shall be maintained. (See Information Practices in Section 13040 of this manual). A copy of IPA shall be provided.
  - Inform volunteers they may be required to divulge information told in confidence by an inmate/parolee. Explain that only certain confidential relationships are legally recognized, i.e., patient/physician, lawyer/client, husband/wife. Therefore, it is possible that a volunteer may be compelled in a court of law to testify about relevant conversations with inmates/parolees.

31040.8 Volunteer Evaluation

The hiring authority shall evaluate their volunteer programs annually to ensure:

- The volunteer activity complements the activities of employees.
- Volunteers are mentally and emotionally capable of providing the desired service.

- Duties are performed in a satisfactory manner with appropriate staff to supervise.
- Activities are consistent with departmental goals and objectives.
- Selection of volunteers is based on affirmative action goals.

The term of service by volunteers shall be contingent upon satisfactory evaluation by management.

31040.8.1 Volunteer Recognition

Supervisors of volunteers shall periodically recognize exemplary volunteer services and programs in the following ways:

- Submission of a request for a certificate of recognition signed by the Director.
- Preparation of a letter of appreciation for the hiring authority's signature.

Letters and justification for the recognition shall be submitted to the CRM, PA, or division head before submission to the hiring authority.

Wardens, RPAs, and division heads are encouraged to prepare press releases in coordination with the CRM for exemplary activities of a volunteer or volunteer program.

31040.9 Termination

The hiring authority may limit or discontinue activities of any volunteer or volunteer group which may impede the security and/or orderly operation of the institution/region.

Criteria

A volunteer or community program shall be terminated if:

- The activity threatens the order and/or security of the program or facility.
- The activity threatens the safety of the volunteer, employees, public, or inmates.
- There is low inmate attendance.
- There is evidence of volunteer misconduct.
- It is not consistent with the mission and objectives of the institution or office.
- There is no appropriate staff supervisor available.

Volunteers or community group members shall receive written notification of their rejection or termination in an expeditious manner.

Volunteer Participation Form (CDC 1049)

The CRM or PA shall provide a completed Volunteer Participation Form, CDC Form 1049, with copy to file, to each volunteer annually or upon termination of participation.

31040.10 Volunteer Rights/ Privileges

Workers' Compensation

Volunteers are eligible for workers' compensation benefits as explained in Section 31020 of this manual. The same reporting procedures for injury or accident to an employee shall be used for volunteers.

Driving on State Business

Volunteers may drive a privately owned vehicle on state business providing an Authorization to Use Privately Owned Vehicles on State Business, STD Form 261 and Volunteer Service Agreement, CDC Form 966 , are completed and approved by duly authorized supervisory personnel. Rules, requirements, and regulations shall be explained in detail to the volunteer. (See DOM 22020, Travel.)

Appeal

Volunteers who wish to appeal a decision for termination of their position or program may write the hiring authority.

31040.11 Advisory Committees

Advisory committees provide positive benefits to the Department in the following areas:

- Public information.
- Community relations.
- Parole placement.
- Development of trade and industrial training programs.

Consultants

The Executive Officer, PIB, is available to each institution and the P&CSD for consultation relative to advisory committees.

Central Office employees and parole employees shall actively participate as consultants to each institution, the P&CSD, and to the Executive Officer, PIB, in regard to advisory committees.

Joint conferences of institutional and parole employees, other state agencies, and advisory committees shall be held periodically to promote understanding of the overall program.

Effectiveness Factors

The effectiveness of trade and parole advisory committees is enhanced by the following:

- Establishment of the committee as an affiliate of a larger community organization such as a service club or other established, reputable body.
- Membership in the advisory committees of an ideal cross-section of the community; i.e., ethnic groups, judiciary, clergy, law enforcement, business, labor unions, and community service groups.

- Tours of institutions/camps and committee attendance at pre-parole classes, parole board hearings, and other activities contingent upon Warden/RPA approval.
- Regular service of the membership account and demonstration of a personal interest in the activities of the group.
- RPAs' supervision and coordination of the planning and organization of committees in their regions.
- Understanding by employees of the purpose and goals of advisory groups so that better communication and public relations result.

31040.11.1 TACs

The Warden, where possible, shall establish TACs for vocational training programs in the area of vocational education, industries, maintenance, or food service. TACs shall be composed as closely as possible of an equal number of persons nominated by representatives of management and labor. Committee members shall be appointed by hiring authorities from recommendations submitted by the groups represented.

Functions

TACs shall provide:

- Consultation on space and equipment requirements, training procedure, and instructor qualifications and selection.
- Standards for inmate selection and training which are relevant to current methods and industry standards.
- Vocational guidance and evaluation of inmate trainees.
- Advice on employment opportunities upon release.
- A medium for better understanding between labor, private industry management, and the Department.

Organization

TACs shall be organized on the basis of one of the following:

- A master committee representing all vocational training areas within the institution with subcommittees for each trade or occupation.
- Individual TACs for each trade or occupation within the institution.

Institutional Coordinator

Each Warden shall nominate for the approval of The Director, an institutional employee who shall:

- Obtain CI&I SSCH.
- Coordinate the organization and programs of the TACs within that institution.
- Maintain and circulate minutes of meetings to all participants and appropriate departmental staff.
- Ensure compliance with the Department's Operations Manual.

This coordinator shall be assisted by employees representing education, plant operations, industries, and other institutional services.

31040.11.2 Parole Advisory Committees

RPAs and their subordinate employees are encouraged to establish parole advisory committees.

These committees develop community interest and promote community support for parolees and correctional programs.

Functions

Parole advisory committees shall provide:

- A counselling and advisory resource to the Parole Agent.
- Knowledge of the community to assist newly released parolees in securing jobs or residency as follows:
    - Acting as voluntary consultants on release employment opportunities.
    - Giving practical assistance, vocational guidance, and evaluation of parolees.
    - Acting as consultants in vocational training of parolees.
    - Interpreting parole to the community leadership.

31040.11.3 Citizens' Advisory Committees

Functions

Each Warden shall establish a Citizens Advisory Committee which shall be used to:

- Improve the public's understanding of correctional programs.
- Influence correctional directions.
- Suggest means to improve and participate in inmate programming.

The role of the committees is to:

- Provide an important opportunity for the Department to gain the support of interested and concerned citizens. Wardens shall extend an invitation to committee members to acquaint themselves with the institution's facilities and programs.
- Voice their concerns and make suggestions for facility and program enhancements as well as to support the institution or facility and its programs.
- Play a key role in furthering the Department's mission. Wardens shall regularly attend meetings and shall feel free to share information with the committee on problems, progress, and resolutions.
- Encourage community service projects, open houses, public education efforts, and any other appropriate activities aimed at strengthening the institution's partnership with the community.

Composition

Each Warden shall appoint a 12 member Citizens Advisory Committee from a list of nominations submitted as follows:

- Two persons from nominations submitted by the Assembly member in whose district the prison is located.
- Two persons from nominations submitted by the Senator in whose district the prison is located.
- Two persons from nominations submitted by the city council of the city containing or nearest to the institution.
- Two persons from nominations submitted by the county board of supervisors of the county containing the institution.
- One person from nominations submitted by the Chief of Police of the city containing or nearest to the institution and the county sheriff of the county containing the institution.

Three persons selected by the Warden including one who is a victim of a crime or a representative of a victim's organization.

Selection

Nominators shall submit biographical data for each nominee.

The Department's EEO and affirmative action policies shall be considered in the selection of nominees.

Orientation

Appointed committee members shall complete an orientation which shall include:

- A meeting with the Warden.
- Inmate, employee and community safety procedures.
- A tour of the institution.

Committee Member Files

A file shall be maintained on each committee member which shall include:

- Oath of allegiance.
- Digest of laws relating to association with prison inmates.
- Statement acknowledging receipt of a copy of the CCR and the IPA.

Operation

Each committee shall select a chairperson by majority vote who shall:

- Call meetings.
- Prepare meeting agendas.
- Preside over meetings.

Term of Members

The term of office of all members shall be two years. Members shall not serve more than two years unless nominated and re-appointed.

The Warden shall solicit a listing of five nominees from designated nominators 90 days prior to the expiration of any member's terms.

Committee member resignations shall be submitted in writing to the chairperson.

Vacancies

Vacancies may result from a member's death, written resignation or unexcused absence from three consecutive meetings. The Warden shall fill any vacancy upon receipt of written notification that a vacancy exists.

The Warden may fill a vacancy with a person selected from, but not limited to, the list of nominees originally submitted by nominators. Additional names may be requested from the nominators by the Warden.

Appointments to fill a vacancy shall be for the remainder of the unexpired term.

Meetings and Minutes

The committee shall meet at least once every two months or as necessary to carry out the purposes and duties of the committee.

The Warden shall meet with the committee at least four times per year. If the Warden is unable to attend, the chief deputy Warden shall attend. Attendance shall not be further delegated.

Committee meetings shall be open to the public. The date, time and place of each meeting shall be published in a local newspaper at least one week prior to the meeting.

Meetings shall be held outside the prison security area. Meetings may be held in public buildings away from the institution. If held on institution property, the meeting shall be accessible to the public without compromising security.

Minutes of each committee meeting shall be kept and a copy forwarded to the Deputy Director, Institutions Division.

Visitation

Advisory committees shall have the power of visitation of prison facilities and personnel in furtherance of committee objectives except in situations where security would be jeopardized.

The Warden shall schedule all visits, and shall personally escort the visitor(s). Scheduled visit agenda shall be subject to change based upon institutional situations at the time of the visit.

Visits to other departmental facilities shall be authorized if, in the opinion of the chairperson and the Warden, such visiting will enhance the work of the committee.

Visits to other departmental facilities shall be only by advance arrangement between the affected Wardens.

The size of the visiting committee shall be determined by the committee itself and the Warden.

The head of the visited institution shall meet with the visiting committee delegation.

Travel Expenses

Travel expenses of the committee members shall be paid as authorized under BOC rule 706(c) and CCR (2) 599.624. Expenses shall be borne by the parent institutions.

31040.12 Revisions

The Assistant Director, CRD, or designee, shall ensure that the content of this section is accurate and current.

31040.13 References

CCR (2) §§ 599 - 624

CCR (15) §§ 3260 - 3265, 3285, 3415.

PC § 5056.

ACA Standards 2-4006, 2-4018, 2-4024, 2-4071, 2-4095, 2-4347, 2-4456, 2-4465, 2-4487 - 2-4495, 2-2054, 2-2180 - 2-2187.

ARTICLE 5 — PARAPROFESSIONAL

Revised Octber 4, 1994

31050.1 Policy

The Department shall work closely with colleges and universities of the State and participate in federally funded programs to maximize the effectiveness and efficiency of correctional programs and for the betterment of persons received as staff from these resources. Through liaison with colleges and universities, the Department shall:

- Recruit academically qualified employees.
- Provide for the academic and professional development of existing employees.
- Make correctional goals and methods known to the academic community by:
  - Increasing and coordinating departmental employee contact with various college and university departments which have an interest in correctional programs (Social Welfare, Criminology, Sociology, Police Science, etc.).
  - Encouraging cooperative training efforts such as courses offered in correctional facilities and use of departmental employees as guest lecturers or instructors on campus.
  - Providing for the placement of students who are interested in a correctional career.

31050.2 Purpose

This section describes job classifications and federally funded programs for the recruitment and development of paraprofessional employees.

31050.3 Responsibility

Hiring authorities shall develop and implement evaluative techniques and methods for the selection and assignment of paraprofessional employees.

The Department's TSB and the HRS shall assist by providing whatever material, information, etc., is needed to carry out plans regarding college liaison or intern and training programs.

31050.4 Federally Funded Programs

The Work Incentive Program (WIN) is administered jointly by the U.S. Departments of Labor and Health and Human Services. The Department's Selection and Standards Branch coordinates all departmental involvement in the WIN program.

Work Incentive Program

The Department participates in two types of WIN training:

- OJT experience. The Department contracts with WIN to provide a work situation wherein enrollees can prepare for and obtain permanent employment. Under this program, WIN enrollees receive their regular grant from local welfare departments and incentive pay from WIN.
- Focused Recruitment Program (FRP). Under this Career Opportunity Development Program, the Department contracts with the Employment Development Department and the SPB to hire WIN eligibles.

The Department's Selection and Standards Branch recruits, tests, and hires the departmental FRP personnel. This branch advises facilities of the identity of FRP personnel, and provides instructions on billing SPB for their 80 percent contribution to FRP personnel's salaries.

31050.5 Job Classifications

Appointment to these job classifications depends upon the number of positions available through funds acquired from State resources. The positions are nontesting, nonstatus classes and temporary in nature.

Student Intern

This program is designed for the student who desires to extend the learning experience to include actual work assignments in the correctional setting. Applicants shall be enrolled in an accredited college program. The positions are not civil service and are not salaried. However, most colleges allow units of credit for this type of experience. Tenure may be for several weeks or months.

Student Assistant

The student assistant assists regular departmental employees in services such as psychological, sociological, educational or administrative; assists in experimental and research projects by gathering data; observes and reports on departmental methods and procedures. Candidates shall produce proof of application for, or enrollment as a student in an appropriate college or university program. Work assigned to incumbents shall be directly related to their college curriculum and academic goals.

Graduate Student

This temporary authorization class is designed to provide currently enrolled graduate students with an opportunity to familiarize themselves with the State's professional work, consistent with their course of study. The major Department use of the class has been in the law student program.

Professional Intern

There are several ways to qualify for the class of professional intern; the most typical being registration in a recognized college or university. The professional intern functions in much the same capacity as the student assistant; however, as experience and training are acquired, responsibilities are increased. The class is nonsalaried, but maintenance items such as employee quarters may be provided if available. The local business manager and personnel representative act as coordinators for this type of appointment.

31050.6 Revisions

The Deputy Director, ASD, or designee shall be responsible for ensuring that the contents of this section are kept current and accurate.

31050.7 References

None.

ARTICLE 6 — APPOINTMENTS

Revised January 17, 2000

31060.1 Policy

Personnel appointments shall be accomplished in a uniform manner consistent with applicable laws, policies, and sound personnel practices.

31060.2 Purpose

This section outlines the procedures and requirements that shall be followed for personnel appointments.

31060.3 Power of Appointment

The Director is the appointing authority for all civil service positions in the Department.

Hiring Authority

The following have been delegated authority by the Director to make civil service appointments:

- Deputy directors.
- Assistant directors.
- Wardens.
- RPAs.
- General Manager, PIA.
- Health Care Manager.
- Health Care Regional Administrator.

Hiring authorities shall:

- Implement and enforce departmental EEO policy.
- Maintain the highest standards of personnel selection.
- Ensure that women and ethnic minorities are represented whenever possible on all interview panels, including examination and hiring interviews.

Except for appointments requiring approval of the Agency Secretary or the Director the hiring authority's signature constitutes departmental approval on all appointment documents.

Managers and Supervisors

Managers and supervisors shall work with the headquarters personnel analyst assigned to their program, their Institutional Personnel Officer (IPO) and business manager to ensure:

- Submittal of accurate job descriptions and organization charts, when required, with proposals for personnel actions, i.e., establishing new positions, reclassifying existing positions.
- Clarification of questionable personnel issues, i.e., appropriate classification, use of hiring lists.
- Appropriate action is taken for personnel commitments or changes in new/borderline areas.
- Appointment procedures and practices are consistent with the EEO policy of the Department (see DOM 31010 of this manual).
- Women and ethnic minorities are represented on all hiring interview panels whenever possible.
- Documentation on CDC Forms shall be kept on file and available for review regarding the gender and ethnic composition of all interview panels, including both examination and hiring interviews. Such documentation shall include justification in all instances in which gender or ethnic representation for an interview panel was not possible.
- Submit quarterly progress reports to appropriate division administration noting and justifying all exceptions in which representation of women or ethnic minorities was not possible for a specific interview panel.

31060.4 Appointments Requiring Agency

Exempt appointments require the approval of the Agency Secretary, YACA .

31060.4.1 Exempt Appointments

For exempt appointments, the hiring authority shall forward the following documents to the Personnel Operations Section.

Hiring Authority Responsibility

- Standard (STD) Form 678, Application for Examination, and resume.
- Duty statement and organization chart for the position.
- Governor's Office application form.

31060.4.2 Career Executive Assignment

The procedure for processing Career Executive Assignment (CEA) appointments is the same as for exempt appointments except:

- The following documents are not required:
  - Duty statement and organization chart.
  - Governor’s Office application form.
- The memorandum from the Director shall be addressed to the Agency Secretary, YACA.

31060.5 Appointments Requiring Director/ Chief Deputy Director Approval

The Director of CDC retains appointing authority for all appointments designated as "managerial" under the Ralph C. Dills Act.

Each hiring authority shall submit formal requests to appoint individuals to designated managerial positions. The "Approval-to-Appoint" memoranda shall be addressed to the Director/Chief Deputy Director and be routed through all appropriate management levels in the respective program area.

This applies to all methods of appointment including:

- Employment list appointment (Permanent or Limited-Term).
- Temporary authorization.
- Training and Development (T&D) assignments.
- Transfers.
- Permissive reinstatements.

Emergency appointments, retired annuitant appointments, and mandatory reinstatements are exempt from these procedures.

All the necessary appointment requirements such as position justification, appointment eligibility, budgetary approvals, and/or compliance with any freeze requirements (STD Form 607, Change in Established Positions; STD Form 625, Request for Certification; or CDC Form 647, CDC Personnel Action Request, as Appropriate), or the State Restriction of Appointment Procedures must be met prior to submission of the package to the Directorate.

"Approval-to-Appoint" Time Frame

The "Approval-to-Appoint" request must be received by the Chief Deputy Director's Office at Least two weeks prior to the requested date of appointment.

Hiring Commitments

Final hiring commitments cannot be made until receipt of the Director's/Chief Deputy Director's approval.

Approval Process

Upon the Director/Chief Deputy Director's approval, the "Approval-to Appoint" package will be forwarded to the Assistant Deputy Director, OPM who will be responsible for notifying the appropriate Deputy Director and/or Warden so that the applicants and selected candidate can be notified.

The appointment shall be announced in the next issue of Correction News.

Disapproved requests shall be returned by the Director's office through the appropriate management levels to the hiring authority.

31060.5.1 Civil Service Appointment at or Above Staff Services Manager I, Captain, and PA-III

The Director has delegated approval authority to the Deputy Directors for civil service appointments at or above the Staff Services Manager I (SSM-I) and PA-III level.

The hiring authority's "Approval-to-Appoint" package shall include the following:

Contents of Request

- Civil service classification of position to be filled, approved duty statement, and a current organization chart.
- A description of the recruitment efforts made to attract applicants and a statement of the efforts make to fulfill the Department's affirmative action goals.
- A summary breakdown by ethnicity, gender, and disability of all candidates interviewed on CDC Form 973, Affirmative Action Report of Appointment. In compliance with GC 8310 and 18704, this summary shall no include names of the candidates. Instead, this summary should consist of generic characteristics (gender and ethnicity) of the candidates and any apparent disabilities.
- A comparative analysis of the qualifications of at least the top three candidates.
- The name of the individual recommended for appointment and a suggested date of appointment along with a statement of reasons for recommendation.
- A current resume, the most recent performance evaluation (STD Form 636, Report for Probationary Employee, or STD Form 637, Individual Development Plan/Performance Appraisal Summary), and a Completed STD Form 678.

31060.5.2 Peace officer Supervisors -Other Than List Appointments

Individuals appointed to the classification of Sergeant, other than by list appointment, must meet specific appointment criteria stipulated in an agreement with the union. In order to be laterally transferred or placed on a T&D assignment, individuals must meet the following criteria:

Appointment to Sergeant

- Two years of custodial experience performing duties comparable to those of Officer, Group Supervisor, Youth Counselor, or Senior MTA, Correctional Facility and Senior Medial Technical Assistant, and work performed in the P&CSD's Return-to Custody and Work-Furlough facilities, as well as duties performed at city and municipal jails. Additionally, experience in the abolished Correctional Program Supervisor classification qualifies for credit towards the two-year requirement.
- Custody experience approved by the Joint Apprenticeship Committee may also qualify for credit. For example, six months credit toward the two-year custody experience requirement will be given for individuals transferring from Parole Agent, Adult Parole classifications who have completed the two-Year apprenticeship program.
- Proposed appointees who are not currently Department' peace officers must meet all legal requirements to be a peace officer and be cleared for appointment by a background investigation and preemployment medical. Successful completion of the Basic Academy is also required unless previously completed.

Proposed appointments to Sergeant positions which are not list appointments or mandatory reinstatements **must be approved in advance** by the respective Deputy Director and the appropriate headquarters personnel operations analyst. Only appointments from employment lists, mandatory reinstatements, or of individuals who have clearly served two or more years in an Officer position do not require advance headquarters approval.

Appointment to Lieutenant and Captain

Prior written approval of the respective Deputy Director and the Chief Deputy Director is required for any appointment, other than a list appointment, to the classifications of Lieutenant and Captain. Such appointments must be fully justified in the written request.

Hiring Authority Responsibility

The hiring authority shall carefully review lateral transfers, T&D assignments, reinstatements and other forms (excluding list appointments) to the Lieutenant and Captain classifications to ensure that the applicant:

- Possesses related custody experience, including supervision of custody staff.
- Meets all legal requirements to be a peace officer and can be cleared for appointment by a background investigation and preemployment medical.

Basic Academy

Persons appointed to the Lieutenant and Captain classifications shall attend the Basic Academy if they have not previously served in a correctional peace officer classification.

31060.5.3 C&PR Appointments

A significant portion of the duties of the C&PR consists of providing a service to the BPT and the NAEA (California Rehabilitation Center only).

The Regional Administrators, Institutions Division (ID), are the liaisons for facilities with BPT and the NAEA.

Basic Academy

Persons appointed shall attend the Basic Academy if they have not previously served in a correctional peace officer classification.

Process

Permanent appointments shall not be made to C&PR vacancies until the following steps have been documented:

- A Warden upon notification of an upcoming vacancy for a C&PR shall, through the departmental Board liaison, advise the Board chairperson of such pending vacancy. This applies to C&PR exchanges also.
- The Board chairperson shall make suggestions regarding individuals who might fill the vacancy.
- The Warden shall consider all applicants for the position including those suggested by the Board chairperson.
- The Board chairperson shall be advised of and encouraged to participate in scheduled interviews.
- Recommendations to the Director shall summarize Board contacts and input to the selection process and shall indicate whether agreement was reached with the Board.

31060.5.4 Classification Staff Representative (CSR) Appointments

Process

The process for selection of CSR is as follows:

- The Chief, Classification Services, shall canvass for interested candidates by the departmentwide job opportunity bulletin.
- All candidates shall submit, a STD Form 678, to the Chief, Classification Services, for review.
- The CSU shall pre-screen all applications for qualifying experience.
- Those applicants accepted for consideration as a CSR shall be scheduled for interviews.
- Applicants not selected for an interview shall be so notified by memorandum or telephone call.
- All CSR appointments require the approval of the Director/Chief Deputy Director.

31060.5.5 Ex-Offender Appointments

The Department prohibits discrimination on the basis of ex-offender status. However, all factors which relate to legal requirements and restraints, facility security, commitment history, and experience shall be considered. Hiring commitments shall not be made without written approval of the Director.

Licensing

Applicable certification or licensing for a position shall not be waived for ex-offenders.

Nonpeace Officer Classifications

A CDC Form 1951-B, Supplemental Application for Non Peace Officer Classifications, is required of all non-peace officer applicants seeking employment with the Department. This form is utilized at the time the employment interview is conducted. Completion of the form should prevent the hiring of any ex-offenders to non-peace officer positions without prior approval of the Director.

Restricted Employment Areas

Ex-offenders shall not be hired or assigned work in areas which provide access to:

- Any records pertaining to free staff.
- Sensitive personal or medical information on inmates.

These areas include, but are not limited to, the following:

- Medical.
- Personnel.
- Records.
- Accounting.
- Data processing.

Legal Prohibition For Peace Officer Classifications

Persons convicted of a felony in this or another state may not be employed as a peace officer of this State. CCR 3291(b) lists the classes designated as peace officers in this Department

Procedural Responsibilities

At least 60 days prior to the requested appointment date, the hiring authority shall:

- Submit an "Approval to Appoint" request to the Director by the Assistant Director, LEIU . This shall include a copy of the ex-offender's CI&I SSCH and the completed CDC Form 1951-B for nonpeace officer classifications.

If the individual is on parole, the request shall identify the name and address of the Parole Agent. If discharged, that date shall be indicated.

The Assistant Director, LEIU, shall:

- Review the original submittal for possible gang affiliations.
- Note the results of this review on the request.
- Forward the request to either the Deputy Director, ID, or Deputy Director, P&CSD, for appropriate data if they are not the hiring authority.

If the request is approved by the affected Deputy Director, it shall be returned to the Assistant Director, LEIU, for final review.

The Assistant Director, LEIU, shall:

- Ensure completion of required materials.
- Forward approved packages to the Director.
- Return denied packages to the hiring authority.
- Return packages with Director's approval/disapproval to the hiring authority.
- Ensure that a copy of all denials/approvals are sent to the Assistant Director, EEO Office.

31060.6 Appointments Requiring Headquarter's Approval

Appointments requiring approval of designated headquarter's staff are described in DOM 31060.6.1 through 31060.6.5.1.

31060.6.1 Chaplain Appointments

All chaplain appointments shall be approved by the appropriate Regional Administrator, ID.

The applicant shall meet the criteria outlined in the SPB specifications before being appointed to the position of full-time or intermittent chaplain.

Muslim Chaplain. The appointee shall be currently in good standing with the American Muslim Community, verified and approved by the local resident Imam where the applicant attends as a member. All candidates shall attach to their application a letter of certification of good standing issued by the local resident Imam.

Jewish Chaplain. The appointee shall be accredited by and in good standing with a recognized California rabbinical body. The two official ecclesiastical endorsing agencies are the Board of Rabbis of Northern California and the Board of Rabbis of Southern California.

Catholic Chaplain. The appointee shall be duly accredited by and in good standing with the Roman Catholic Church and approved by the Bishop of the diocese in which the facility is located.

Protestant Chaplain. The appointee shall be currently ordained, duly accredited by and in good standing with a nationally recognized Protestant denomination.

Native American Spiritual Leader. The appointee shall be currently recognized as a spiritual leader and in good standing with their Native American Tribe, Nation, Band or Rancheria. All candidates shall attach to their application a letter of certification of good standing issued by their Native American Tribe, Nation, Band or Rancheria.

Intermittent Chaplains

The Department may employ, under State civil service, intermittent Catholic, Jewish, Muslim and Protestant chaplains.

Part-Time Chaplains

The Department may contract with clergy of any faith as part-time or intermittent chaplains to provide religious services and chaplaincy activities for a small group.

Substitute Chaplains

When a staff chaplain is on an authorized absence and a substitute chaplain cannot be obtained without cost to the State, a fee can be paid to the substitute for any single day of service.

31060.6.2 Retired Annuitant Appointments

A person who retired from state service may be appointed to a civil service position and paid a salary without being reinstated from retirement.

A person who retired from a CEA may be temporarily employed at any time following retirement in a CEA position.

Class

Retired annuitants shall:

- Be appointed to a position in a class in which the person had permanent or probationary status at the time of retirement or in a class to which the person could have permanently transferred, reinstated, or demoted at the time of retirement.

Duration

- Be appointed for no more than 120 working days or a duration total of 960 hours in any calendar year. Returning annuitants may be re-appointed every calendar year.

Salary

- Be paid at a rate substantially the same as other employees performing comparable duties.

Benefits

- Be compensated only for actual time worked and shall not earn benefits of any kind, e.g., sick leave, vacation, holiday pay, personal holiday, or retirement credits.

Appointment Requirements

Non-peace officer appointments shall complete a STD Form 610, Health Questionnaire.

Individuals being appointed as retired annuitants to perform in a peace officer capacity who were previously employed by CDC as peace officers, shall be fingerprinted for purposes of a criminal records check (DOM Section 31060), complete an STD Form 610, and a Selection and Standards Branch (SSB) B51, Retired Peace Officer Personal History Update, prior to, or on the first day of reporting to work. Due to the temporary nature of retired annuitant appointments, the annuitant may commence work pending the receipt of DOJ's response.

The STD Form 610 shall be reviewed and approved/disapproved by a personnel office representative in the same manner as those for non-peace officer appointments. The Pre-employment Medical Unit of the SSB may be contacted for guidance concerning any medical conditions reported by a retired annuitant and its relevance to the annuitants's ability to perform peace officer duties. The telephone number is (916) 227-2099.

The SSB-B51 shall be reviewed by the hiring authority. A memorandum stating the reasons for continuing the employment of a retired annuitant shall be attached to any form indicating arrests, convictions, or adverse actions.

The STD Form 610, the SSB-B51 and the response from DOJ shall be maintained in the employee's official personnel file. The STD Form 610 shall be sealed in a confidential envelope.

The hiring authority is required to contact the Equal Employment Opportunity Office, the Office of Internal Affairs and the Personnel Operations Section to determine if the individual was the subject of an investigation which resulted in a finding that the individual was at fault and/or suffered adverse action. If so, a summary of the information is to be attached to the SSB-B51 with the reasons for continuing the appointment and included in the OPF.

Nature of Work

Retired annuitants may be appointed:

- On a short-term basis to cover emergency-related work.
- To use their special skills.

Retired annuitants may be appropriate to temporarily fill:

- Behind an employee on sick leave.
- A position which has remained vacant for an extended period of time.

Approval

A commitment to hire a retired annuitant requires prior approval of the appropriate Deputy Director, Assistant Deputy Director, or Assistant Director.

Hiring Authority Responsibility

The hiring authority shall forward the following to the Personnel Operations Section:

- A CDC Form 1823, Hiring Approval - Retired Annuitant .
- A CDC Form 647, Department - Personnel Action Request (headquarters' and P&CSD).
- A CDC Form 647-A, Request for Personnel Action - Institutions , or a memorandum from the Warden to the Deputy Director, Assistant Deputy Director, or Assistant Director.
- A STD Form 678, State of California Application for Examination and resume.
- A Duty statement with percentage breakdown.
- A Organization chart.

Personnel Analyst Responsibility

The appropriate personnel analyst shall:

- Review the request.
- Recommend approval/disapproval.
- Forward approved request to the appropriate Deputy Director, Assistant Deputy Director or Assistant Director.
- Inform the hiring authority of denials by telephone.

Copies

A copy of approved request with comments shall be returned to the hiring authority.

A copy of denied request and the analyst's explanatory comments shall be transmitted to the hiring authority by a memorandum from the Assistant Deputy Director, OPM.

Original

The original request shall be filed in the Personnel Operations Sections Retired Annuitant subject file.

Calendar Year

A new CDC Form 647 or 647-A shall be approved before the beginning of each calendar year.

Fiscal Year

If the CDC Form 647 indicates funding through the fiscal year only, an additional CDC Form 647 shall be submitted for approval for the period July 1 through December 31.

31060.6.3 Emergency Appointments

Emergency appointments shall be justified by significant need.

- Any expanded use of emergency appointments, particularly for emergency acting assignments not supported by a significant need, are in conflict with basic constitutional provisions requiring appointments based on competitive examinations.

- All available civil service alternatives shall be considered before making emergency appointments for short duration work assignments.

Appointments which may be approved by the hiring authority are described in Sections 31060.6.2.1 through 31060.6.2.4.

31060.6.3.1 Extreme Emergency

This type of appointment shall not exceed 60 working days in any 12-month period.

Extreme emergencies include fires, floods, storms, epidemics, riots, earthquakes, and other such serious situations presenting extreme peril to persons or property or seriously interrupting the performance of public business.

When an extreme emergency is declared by the Governor or the Director, appointments may be made without regard to employment lists and, if necessary, without regard to existing classes in order to prevent the stoppage of public business.

31060.6.3.2 Short Duration Work

A short duration work situation is one which:

- Because of its unusual urgency, nature, volume, location(s), duration, or other special characteristics is distinct from the range of work normally performed by regular staff.
- Is not expected to be performed within the department for more that 30 working days within any 12-month period.

Short duration work assignments shall not be extended nor shall they be consecutive. Appointments may be converted to acting assignments when circumstances warrant.

Positions that are readily filled by the regular civil service process or for routine needs (i.e., vacation relief) shall not be filled by short duration appointments.

31060.6.3.3 Out-of-Class Assignments

Out-of-class assignments (also called acting assignments) shall be used only as the last option when filling a position. Limited-term (LT) appointments are the appropriate means to fill critical positions on a short-term basis.

Advance planning and scheduling can reduce an operation's dependency on out-of-class assignments. By using established certification lists, qualified employees can be appointed immediately to vacant critical positions.

Misuse of out-of-class assignments results in grievances (circumventing list procedures), higher costs (lost person hours, working on out-of-class claims), the potential loss of delegated testing authority and the centralization of approval for all out-of-class assignments. However, bonafide emergency out-of-class assignments may be used.

Guidelines

Managers and supervisors shall ensure that all employees are assigned duties and responsibilities that are within the scope of their classification. Employees shall not work out-of-class on a regular, ongoing basis.

Current bargaining unit language, as well as DPA Rule 599.810, states that “an employee may be required to perform work other than that described in the specification for their classification for up to 120-consecutive calendar days during a fiscal year.” This language is intended to provide appointing authorities the flexibility necessary to meet short-term, temporary staffing needs. All viable alternates shall have been exhausted before any out-of-class assignment is approved.

An employee may be assigned out-of-class work for more than 120 days if the additional out-of-class work is required to meet a need that cannot be met through other administrative or civil service alternatives. **Prior approval from DPA is required.** Such assignments shall be subject to termination by the Director of DPA upon determination that other reasonable alternatives do exist.

The “120-consecutive calendar days during a fiscal year” applies to both the assignment and the individual. The same assignment cannot extend beyond July 1 or a new fiscal year resulting in an individual serving in the assignment for more than 120 calendar days. Such situations would require DPA approval to extend beyond 120 calendar days.

Recent interpretation from DPA states that good personnel management practice precludes an indefinite out-of-class assignment by rotating employees in and out of the assignment. The 120 days should be a sufficient period of time to resolve and out-of-class situation. Rotations are inappropriate and circumvent the intent of the out-of-class provisions.

The out-of-class provisions apply to both rank and file and non-represented employees. Managerial employees are not covered under DPA Rule 599.810 and there is no authorization to assign the out-of-class duties.

Criteria

Out-of-class assignments may be made only to established positions and only if it can be demonstrated that:

- The assignment is needed to meet a specific operating need.
- The need cannot be feasibly met through civil service procedures or other administrative alternatives.
- The employee is assigned duties which are clearly outside the scope of their current class and which include the full range of duties of the assigned class. The out of class duties must be performed for more than 50 percent of the employee’s time.
- The supervisor requests the employee, in writing and in advance of the assignment, to perform the duties of a higher class.

No out-of-class assignments shall be considered for approval retroactively. The grievance process is the appropriate method for employees to obtain payment if their out-of-class assignment was not approved accordance with established guidelines.

No out-of-class assignments to "MCR NONE" classes shall be approved retroactively.

Operating Needs

An operating need may exist when leaving a position vacant results in:

- Inadequate management or supervision of a unit or function that cannot be offset from other sources.
- Risk to public health and safety.
- The interruption of public service.

- An economic loss or program delay.

Alternatives

If a need is established, the following alternatives should be considered before an employee is given an out-of-class assignment:

- Delaying or canceling other less critical work.
- Temporarily redirecting the unit's staff, workload, or resources in order to “work around” the vacancy.
- Filling the position with a locally available person on a temporary basis through another civil service procedure such as emergency, LT, temporary authorization (TAU), or intermittent appointment.
- Modifying the duties temporarily until the position can be filled.

Appropriate Assignments

Examples of out-of-class assignments that are viewed by the Department as appropriate consist of the following:

- An immediate assignment involving risk of life, property, or critical operation of the Department.
- Back-up for an employee absent on extended sick leave.
- A vacant position that needs temporary filling until an employment list is available.
- The assignment is temporary in nature, with no definite time period but less that 120 calendar days, and all viable recruitment efforts to fill the position have been exhausted.

Inappropriate Assignments

Examples of inappropriate/out-of-class assignments are as follows:

- An assignment where no budgeted positions exist.
- A certification list is available so that a LT appointment could be made, the desired employee is on the list but is not reachable, or the list was canvassed but the candidate group is undesirable.
- An assignment was made to bypass the Departmental Restrictions of Appointment (DROA), State Restrictions of Appointment (SROA), and/or re-employment list process.
- The assignment can be covered by a T&D assignment, a reinstatement, an emergency appointment, or a TAU appointment.
- An intermittent pool of candidates is available.
- Changes have been made to a class specification and/or allocation standards and the employee claims to have been working in a higher classification prior to the effective date of the change.
- The employee requests some of the higher level duties for career development, personal convenience, or gain.
- In the following situations, unless pre-approved by DPA:
  - To positions or levels requiring classification pre-approval by DPA (MCR NONE).
  - To positions or levels not authorized in the appointing power's budget. Before considering pre-approval in these situations, DPA will require specific written notice from the DOF that funding is available.
  - Where the employee's class specification provides for the proposed work assignment.

When any of these options are considered, the Personnel Operations Analyst shall be contacted for guidance and interpretation.

Process

The supervisor shall prepare the following documents:

- A request for approval to make an out-of-class assignment.
- A CDC Form 1821, Out-of-Class Checklist .
- A duty statement.
- An organizational chart.
- A CDC Form 1820, Out-of-Class Justification For Assignments Exceeding 120 Days .

The Out-of-Class Checklist shall provide the information necessary for the review and evaluation of the request and for completion of the Out-of-Class Justification.

The checklist will also serve as an audit trail for peer audits, payment of claims, and examination eligibility.

The document shall be forwarded to the appropriate approval levels in accordance with Section IX of the Out-of-Class Checklist.

Approvals

All out-of-class assignments requests require the approval of the IPO or Personnel Operations Analyst to ensure that all viable alternatives have been exhausted before the request is forwarded for final approval.

Prior final approval is required for out-of-class assignments as follows:

Duration of Assignment	Documents Required	Approval Required
Up to 60 Calendar Days	Request for Approval Out-of-Class Checklist	IPO or Personnel Operations Analyst

61 to 120 Calendar Days*	The above	The above and Personnel Operations Analyst
Over 120 Calendar Days**	The Above and Out-of-Class Justification Form (2 Copies)	The Above and the Departmental Personnel Officer, the Chief Deputy Directors, and DPA

***** When the hiring authority becomes aware that the assignment may extend beyond 60 days, the Personnel Operations Section shall be notified. The written request shall be received by Personnel Operations Section no later than day 50 of the assignment.

****** Requests shall be received by Personnel Operations Section no later than day 100 of the assignment. The Departmental Personnel Officer shall forward approved requests to the DPA for review.

The departmental personnel officer may deny a claim if it does not meet existing criteria.

When a request is inconsistent with departmental policy, the Personnel Operations Section shall return the unapproved request directly to the hiring authority.

Log/Record

For audit purposes each approval authority shall keep a log/record of all out-of-class assignment requests and/or out-of-class compensations claims.

Compensation

See DOM 31150.9 for out-of-class compensation guidelines.

31060.6.3.3.1 Applying Out-of- Class Experience for Admittance To State Examinations

Out-of-Class experience is work experience gained in the performance of duties outside the class concept of the employee's current class of appointment.

A departmental employee, regardless of employee relation designation, may request verification of out-of-class experience once they have performed out-of-class work for 30 consecutive calendar days.

Personnel Operations analysts review these requests and apply the same standards of more than 50 percent used for out-of-class claims.

Employee Requests

An employee who wants verification shall, in writing, request the hiring authority to verify that they have accepted and performed assigned duties that were not consistent with the employee's class.

Time Restraints

Requests shall not be made:

- Prior to performing out-of-class duties 30 consecutive calendar days.
- Later than 180 calendar days after the ending of the out-of-class duties.

Certification

The hiring authority's certification shall include:

- The employee's name and social security number.
- A description of type and level of duties performed.
- A duty statement with percentages.
- A conclusion regarding whether the duties are or are not consistent with the employee's class of appointment at the time; and if not consistent, an identification of the class to which such duties are appropriate.
- A detailed explanation of the situation which necessitated the out-of-class assignment.
- An explanation of the other administrative and/or civil service options considered and why they were not used.
- A copy of the departmental memorandum from the employee's supervisor who assigned the duties to the employee.
- The dates of the out-of-class assignment.
- When the certification is for admission to an examination, the title of the examination to which the employee is applying.

Approval Responsibility

The hiring authority certification shall be forwarded to the Personnel Examining Section who shall:

- Review the verification.
- Provide the employee and the hiring authority with a memorandum advising whether the certification met SPB standards.
- Forward the certification to the Personnel Operations Analyst for analysis and recommendation of the appropriate class.
- If approved, forward the verification to the SPB.

Once approved by the Personnel Examining Section, the certification can be used as additional qualifying experience for current or future examinations by attaching a copy to the application.

Appeal Rights

If the request for verification is denied, the employee has the right to appeal the denial to the SPB.

31060.6.3.4 Reinstatement After Emergency

Permanent or probationary employees who vacate positions to accept emergency appointments shall have mandatory right of return to their former position upon the conclusion of the emergency appointment if:

- The emergency appointment is under the same appointing power as the position the employee is vacating; or,
- The employee is granted paid or unpaid leave to accept the emergency appointment.

31060.6.3.5 Emergency Appointment Documentation

For audit purposes, the hiring authority shall prepare a written justification for all emergency and short duration work appointments.

The justification shall include:

- A detailed explanation of the situation requiring the appointment.
- An explanation of the other administrative and/or civil service alternatives that were considered and why each was not used.
- The name, social security number, and current classification (if applicable) of the appointee.
- A duty statement, position title, and estimate of the number of days the appointment will be necessary.
- When appropriate, a copy of the Declaration of Emergency signed by the Governor or the Director.

The justification shall be retained in the official personnel file.

A copy shall be submitted to the Personnel Operations Section no later than 20 calendar days after the effective date of the appointment.

31060.6.4 Limited-Term Appointments

The Department has authority to make and extend LT appointments. Initial appointments shall be limited to up to one year. The extension shall be limited to up to one additional year and may be considered when a permanent appointment is likely to cause a layoff, demotion, or mandatory transfer requiring a change of residence upon the conclusion of the temporary staffing need.

Requirements

Eligible lists shall not be circumvented by a LT appointment to a permanent position. Positions which are of limited duration shall not be filled on a permanent basis since this removes the appointee from consideration for true permanent positions and bestows unwarranted permanent status.

Permanent rather than LT appointments may be more appropriate when:

- The temporary vacancy is in a classification subject to high turnover.
- New positions are established on a temporary basis pending approval of the State budget, since the positions shall be converted to permanent when the budget is adopted.

Local Approval

In the following situations, the hiring authority may authorize one or more LT appointments, provided the total time of an employee's appointment(s) does not exceed one year.

- Seasonally recurrent positions. Appointments to non-testing or TAU only classes may be made for a period of up to nine months in one transaction.
- Positions established for a specific study or survey. Research projects may require the creation of specific classes for the duration of the project.
- Temporary vacancies. A person being on a leave of absence for one year or less.
- The appointment of a permanent employee to a different position on a LT basis.

Headquarters Approval

The following appointments require advance approval from the Personnel Operations Section:

- Temporary filling of vacancies during or pending a reorganization or possible layoff situation.
- Vacancies filled in anticipation of reorganization or layoff expected to span a period of more than one year may be filled by permanent appointment.

This approval process shall ensure consistency with the Department's restriction of appointment process.

Two-Year Appointments

One-year, limited-term appointments may be extended for up to a total period of two years upon prior approval by the Chief, Personnel Management. All such requests shall be forwarded to the Personnel Operations Section at least 30 days prior to the effective date, and include the following information:

- Name, social security number, and civil service classification of employee.
- Period of time involved.
- Justification for the need to authorize a LT appointment to exceed one year.

The anticipated number of limited-term appointments, the number and location of permanent positions in the classification, turnover rate for the classification, budgetary trends, and issues which impact the Department's ability to absorb permanent employees either locally or departmentwide shall be considered when the justification is prepared.

Justification File

For audit purposes, the Personnel Operations Section shall file and retain for three years the hiring authority's requests and justifications for appointments to exceed one year.

31060.6.5 Training and Development Assignments

Purpose

The Department shall use T&D assignments:

- To provide employees broader experiences and skills, to improve their ability to perform in their current assignments.

- To assist employees in seeking future advancements.
- To facilitate employees' entry into different occupational fields.
- To enhance the Department's affirmative action and upward mobility goals.
- As an effective tool for upward mobility purposes.

Hiring authorities shall consider affirmative action needs and protected group deficiencies prior to the selection of an employee for a T&D assignment.

General Requirements

The hiring authority shall ensure a T&D assignment:

- Is consistent with the career development plan of the employee.
- Duties are significantly different than those the employee has performed in the preceding five years.
- Provides a clear management advantage to the state.
- Shall not result in a layoff or demotion at the termination of the T&D assignment.

No more than one person shall be appointed to a T&D assignment for each available vacancy.

T&D opportunities require a minimum publicity period of seven days to ensure that all interested employees are afforded the opportunity to apply. Posting may be limited to geographic areas where employees could reasonably be expected to accept the opportunity without a change in residence.

If a permanent class has not been identified for the training position, the position must be permanently allocated to an appropriate civil service class prior to considering a T&D assignment.

Class Relationships

As long as the SPB criteria are met, an employee may accept T&D assignments to a class with substantially the same salary to which the employee could voluntarily transfer (within two salary steps) even if they are currently on an employment list for the assigned training class.

Eligibility

Permanent and probationary (with prior permanent status) employees are eligible for T&D assignments. Time on a T&D assignment counts toward completion of probation. Employees on temporary or limited-term appointments shall return to their former position before being appointed to a T&D assignment.

Employees shall not be considered for T&D assignments in classes which have a promotional relationship to their current class. The class specification shall be reviewed to ensure that the individual's permanent class is not listed in the minimum qualifications (MQs) of the training class and there is no promotional relationship.

Higher than Three Salary Steps

T&D assignments to higher level classes (beyond three salary steps) shall only be considered as exceptions and shall meet the following additional criteria:

- The intent is to prepare the employee for a permanent career change.
- The higher salaried class is the nearest class (in salary) that will provide the appropriate training experience.
- The employee may meet the MQs of the training class prior to appointment and shall meet them by the conclusion of the assignment.
- The T&D assignment shall not circumvent the normal competitive promotional process.

Lower than Two Salary Steps

T&D assignments to lower-level classes (beyond two salary steps) shall be considered as exceptions and shall meet the following additional criteria:

- T&D assignments to lower-level classes shall only be used in very broad class series in which employees expect to reach the journey or supervisory level within one specialty, without having had experience in other major specialties covered by the class.

For example, a SSM I whose career had been limited to management analysis, could participate in a T&D assignment as an Associate Budget Analyst position in preparation for assumption of SSM I level duties in the budget area.

- The lower salaried class is the nearest class (in salary) that provides the appropriate training experience.
- The training experience differs from the duties the employee has previously performed, i.e., they cannot have immediate previous experience in the assigned training class.

Duration

T&D assignments for an individual shall not be limited in number or frequency, but shall not exceed 24 months in any consecutive 36-month period.

Peace Officer Training

Employees in positions designated as peace officers shall:

- Successfully participate in the required peace officer training course.
- Obtain a background clearance.
- Pass all required medical examinations and physical abilities test.

Formal Class Requirements

While employees are not generally required to meet the "experience and education" requirements of the training class, employees shall possess any credential, license, certificate, or other formal requirements of the class prior to assumption of the duties of the T&D assignment.

It is required that employees meet the minimum qualifications to be placed on a T&D to Sergeant, Lieutenant, or Captain. Exceptions to this requirement for T&D assignments to Lieutenant and Captain must be approved in advance, in writing, by the Director.

Shift Differentials/ Housing Stipends

Alternate Range 40 shift differential compensation and/or housing stipends shall be terminated when a T&D assignment does not meet established criteria/requirements.

Employees serving in CEAs shall not participate in T&D assignments to ensure that they are assigned only to those positions that have been specifically approved for inclusion in the CEA category.

31060.6.5.1 Documentation and Procedural Requirements

A formal T&D assignment plan shall be prepared and submitted on a CDC Form 1825, Training and Development Plan and CDC Form 1825 A, Training and Development Request and shall include:

- The civil service class of the training position.
- The permanent classification of the employee.
- The basic objectives of the training.
- The duties to be performed.
- The training to be accomplished.
- Return rights of the employee.
- Statement that the assignment may be terminated at any time by either the employee or the Department.
- Certification that:
  - This assignment shall not result in a layoff or demotion upon its termination.
  - SROA procedures were observed.
- The signatures of the employee and the hiring authority of both the receiving and releasing organizations.

The individual's STD Form 678, and resume shall be attached.

To allow adequate processing time, the plan shall be submitted to the Personnel Operations Section at least 30 days before the reporting date.

Starting Date

The Personnel Operations Section may adjust the starting date on any T&D assignment. It shall be clearly understood that any T&D changes required by the Personnel Operations Section may impact such issues as relocation expenses and eligibility to participate in the proposed T&D program.

Approval

The T&D assignment plan shall be approved by the Personnel Operations Analyst prior to the actual reporting date of the employee.

Upon approval, the Personnel Operations Section shall retain the original T&D assignment plan and forward copies to the receiving and releasing hiring authorities and the employee.

Written notification shall be submitted to the Personnel Operations Section if:

- There are subsequent changes/revisions to the original plan.
- The assignment is terminated prior to its expiration date.

Position Reclassification

The reclassification of the position is required before the training is implemented.

The hiring authority shall submit a STD Form 607, to OBM so that the position is reclassified to the permanent class of the employee upon approval of the T&D assignment. The STD Form 607 shall clearly indicate that the reclassification is for T&D purposes and include the employee's name and approved T&D plan.

If the T&D assignment is denied, the STD Form 607 shall be denied at the same time and returned to the originator.

Vacated Position

To ensure employee placement, the position vacated by the employee accepting the training assignment shall be filled on a temporary basis unless it can be clearly demonstrated that an appropriate position in the employee's "home" organization and location shall be available at the completion of the T&D assignment.

31060.6.5.2 Promotion/Transfer While on a T&D Assignment

Promotion/transfer opportunities shall not be jeopardized as a result of a T&D assignment. Provisions for promoting/transferring the individual while on the training assignment are:

- The individual clearly would have been considered for promotion/transfer if not on the training assignment.
- In a promotional situation, the individual must be reachable on the eligible list and receive a bonafide job commitment.

When a firm commitment is made in a promotional or transfer situation, the offering organization shall appoint the individual and transfer the employee back to the training location to complete the training assignment. This ensures the employee mandatory right of return to the offering organization/location.

The new appointment shall not create an inappropriate training assignment. If the promotional/transfer class does not meet the training assignment criteria relative to the training class, the appointment shall not be authorized while on the training assignment; or the T&D assignment shall be terminated upon the appointment of the employee.

31060.6.5.3 Termination of T&D During Staff Reductions

During staff reductions, T&D assignments shall be terminated in affected classifications and/or related positions.

Employees in an affected classification shall be:

- Appropriately included when compiling seniority lists.

- Returned to their former positions.

When the affected classification is one in which surplus employees have been identified and positions are filled with T&Ds:

- The T&D(s) shall be terminated.
- The positions filled with the most senior affected employees.

T&D assignments shall not be used to resolve staff reductions.

31060.7 Restriction of Appointments

Restriction of Appointments lists are established to aid in the placement of employees facing transfer, layoff, or demotion. Both the state and the departmental restriction of appointment processes, described below, shall be followed prior to filling vacant positions.

31060.7.1 State Restriction of Appointments (SROA)

The SROA policies and procedures:

- Are published periodically by the DPA.
- Shall be followed in making all appointments not specifically exempted from SROA. Questions regarding which appointments are exempt from SROA shall be directed to the IPO for the correctional facility or the Personnel Operations Section analyst for headquarter programs.

SROA eligible lists:

- Are maintained by the SPB and are issued to hiring departments.
- Contain classes of employees who, as a result of position reductions, are facing layoff or demotion if placements are not made.

SROA Coordinator's Responsibility

The SROA Coordinator in the Personnel Operations Section is responsible for ensuring that all policy and procedure updates are disseminated throughout the Department.

Institutional Personnel Officer's Responsibility

The IPO is responsible for:

- Providing consultation to institutional program staff regarding DROA requirements.
- Reviewing and approving SROA clearances for all facility appointments. The CDC Form 8022, State Restrictions of Appointment/Departmental Restrictions of Appointment Clearances Worksheet , Shall be used for requesting clearances.
- Preparing SROA exemption requests following all criteria requirements listed in the SROA Policy and Procedures Manual and forwarding requests to the Personnel Operations Section analyst for review, consideration, final approval, an submission to the DPA.
- Ensuring that approved SROA clearance forms and approved SROA exemption requests are attached to all appointment documents which are not specifically exempted from SROA.

Personnel Operations Section Analyst's Responsibility

The Personnel Operations Section analyst is responsible for:

- Providing consultation to headquarter program staff and to the IPO regarding SROA requirements.
- Reviewing and approving SROA clearance requests for all headquarter programs.
- Reviewing, preparing, and forwarding SROA exemption requests received from either the facility or headquarter programs to the DPA.
- Ensuring that approved SROA clearance forms and approved SROA exemption requests are attached to all appointment documents that are not specifically exempted from SROA.

Hiring Supervisor's Responsibility

The hiring supervisory is responsible for:

- Following SROA policies and procedures.
- Completing a SROA clearance form or SROA exemption request and ensuring that it is submitted to either the IPO or the Personnel Operations Section analyst for processing.
- Ensuring that SROA clearance or exemption approval is received prior to making a hiring commitment for all appointments not specifically exempted from SROA.

SROA Exemption Requests

All SROA exemption requests shall:

- Provide sufficient information to support the exemption and meet all criteria requirements listed in the SROA Policy and Procedures Manual.
- Be signed by the appropriate hiring authority or any member of the Director's Executive Staff.
- Be forwarded to the Personnel Operations Section analyst for review and submission to the DPA. Requests for facilities shall be submitted to the IPO form submission to the Personnel Operations Section analyst.

31060.7.2 Departmental Restriction of Appointments

The DROA process is intended to assist in the placement of surplus employees resulting from administratively approved program changes or budget-induced position reductions and to avoid a layoff.

This process applies to all appointments except:

- Emergency appointments.
- Mandatory reinstatements.

- Promotions in place that do not result in a true vacancy (e.g., Staff Services Analyst to Associate Governmental Program Analyst).

Departmental Placement Coordinator Responsibilities

The departmental placement coordinator shall:

- Publish and distribute the list of classes for which approval is required prior to appointment.
- Update the list as necessary.
- Upon notification from the IPO that a surplus exists, submit a memorandum to the LRB requesting union notification of the surplus.
- When the union has been notified, send an informational surplus employee memorandum to all employees in the affected classification(s).
- Review requests to fill vacancies on an exceptional basis or when no interest in the vacant position has been expressed by the DROA candidates.
- Take or recommend appropriate appointment actions.
- Actively monitor the voluntary placement of surplus employees to appropriately classified vacant positions.
- If necessary, work with the hiring authority, the Labor Relations Office and the appropriate control agencies to coordinate involuntary transfers and/or an employee layoff.

The informational surplus employee memorandum shall include a current list of vacancies in the affected employee's classification.

The employee will be given the opportunity to voluntarily seek a vacant position.

If voluntary placement options are unsuccessful, the employee shall be reassigned to a different location or a comparable classification in the same location.

Institutional Personnel Officer Responsibilities

The IPO shall submit timely monthly lists of current and anticipated vacant positions for the classes on DROA directly to the departmental Personnel Officer.

Prior to filling a position listed on the restricted hiring list, the IPO shall take the following steps:

- Contact the IPO of the organization where the surplus exists to obtain the names and addresses of the employees on DROA.
- Send out a CDC Form 1486, Departmental Restriction of Appointment (DROA) Clearance and Waiver , to all affected employees. Telephone contacts may be made but shall be followed up with a CDC Form 1486.
- Secure approval to fill the vacancy from the Personnel Operations Analyst if no interest is expressed by the employees on DROA. This approval only applies to the DROA restrictions and is not intended to replace or supersede other hiring requirements. Such requests for approval may be by telephone but shall be confirmed in writing.
- Complete a CDC Form 1162, State of California Departmental Restriction of Appointments Confirmation Letter , for each classification.
- Submit a copy to the Personnel Operations Analyst within ten calendar days after verbal approval is received and to the IPO at the surplus institution for audit purposes.
- Retain a copy for the originator's files.

Special Exceptions

Requests for exceptions (including LT and intermittent appointments) to this process shall:

- Be signed by the appropriate hiring authority or any member of the Director's Executive Staff.
- Be forwarded to the Personnel Operations Analyst for review and approval.
- Provide the following information:
    - The nature of the critical need and why identified DROA eligibles cannot meet the needs of the position.
    - A copy of the position duty statement.
    - The consequence if any exception is not granted.

The projected time frame for any employee to remain on the DROA list is approximately 120 days. Within this 120 days, the following activities take place:

- The classification is placed on DROA and frozen to preclude appointments to the class without obtaining appropriate DROA clearances.
- The Personnel Operations analyst notifies the employees in the affected class of the action while simultaneously notifying the LRB so they can notify the union..
- The Personnel Operations analyst actively monitors the placement of surplus employees to appropriately classified vacant positions. If the employee is not placed, they are given an official involuntary transfer notification 60 days prior to the proposed action.

31060.8 Peace Officer Designations

Certain departmental employees are designated as peace officers (see CCR (15)(3) 3291[b]).

Temporary Peace Officer Designations

Any person summoned to the aid of a uniformed peace officer shall be vested with such powers as are delegated by the summoning officer or as are reasonably necessary to properly assist such an officer.

Therefore, any employee officially assigned to act in the peace officer capacity of classifications listed in CCR (15) 3291(b) is a peace officer.

Employees assigned to perform peace officer duties or summoned to aid during an emergency are designated peace officers for the duration of the emergency or until relieved of peace officer duties.

31060.8.1 Designating Additional

The Director is authorized by PC 830 to designate any non-listed employee as a peace officer. Performance of the following functions as a regular, on-going job requirement shall be a major determinant in designating non-listed employees as peace officers:

- Regular use of firearms with authorization to use deadly force and less-than-lethal devices for which specialized training is mandated.
- Transportation or supervision requiring arms and/or restraints of inmates outside of facility property.
- Investigation of felonies committed in prison as a major part of the employee's duties.
- Exercise of peace officer powers as applied to the general public as in the case of visitors or demonstrators.
- Regular supervision of a significant number of peace officers in the performance of their duties.

31060.8.2 Minimum Legal Standards for Peace Officer Appointments

Persons appointed to peace officer classifications shall meet all of the following minimum legal qualifications and standards prior to appointment:

- Be a citizen of the U.S.or a permanent resident alien who is eligible for and has applied for citizenship at least one year prior to application for the peace officer position.
- Be 21 years of age or older.
- Be fingerprinted for purposes of search of local, state, and national fingerprint files to disclose any criminal record.
- Be of good moral character, as determined by a thorough background investigation.
- Be a high school graduate or pass the General Education Development test indicating high school graduation level, or have attained a two year of four year degree from a college or university accredited by the Western Association of Colleges and universities. This provision shall not apply to any public officer or employee who was employed, prior to the effective date of the amendment of GC Section 1031, make at the 1971 Regular Session of the Legislature, in any positions declared by law prior to the effective date of such amendment to be peace officer positions..
- Be free from any physical, emotional, or mental condition which might adversely affect the exercise of the powers of a peace officer. Physical condition shall be evaluated by a licensed physician/surgeon. Emotional and mental condition shall be evaluated by a licensed physician/surgeon or by a licensed psychologist who has a doctoral degree in psychology and at least five years of postgraduate experience in the diagnosis and treatment of emotional and mental disorders.

31060.8.2.1 Required For Peace Officer

No person shall be appointed to or begin training as a peace officer until a physical abilities test, background investigation, and a medical examination has been completed and written clearance has been received from the Chief, S&SB, or their designee.

Exceptions

Physical abilities test are required only for Officer, MTA, CC-I, and PA-I.

A background investigation shall not be required if the applicant is:

- A peace officer currently employed by the department.
- Being appointed by mandatory reinstatement to a peace officer classification.
- A retired annuitant who will be performing in an administrative capacity only.

31060.9 Peace Officer Recruitment, Evaluation, Testing, and Selection

To ensure an effective and diverse peace officer work force, the department shall:

- Actively recruit entrance-level applicants.
- Carefully evaluate, examine and test applicants prior to appointment, including:
  - List appointment.
  - Reinstatement.
  - Lateral Transfer.
  - T&D Assignment.
  - Other forms of appointment.

31060.9.1 Selection and Standards Branch (S&SB) Functions and Responsibilities

The S&SB shall administer the following functions:

- The examinations for Officer, MTA, CC-I, and PA-I.
- Physical abilities test, background investigations and peace officer employment medical examinations pursuant to the request of a hiring authority wishing to appoint a nonpeace officer applicant to a peace officer position (See DOM 31060.9.3.3).
- Appointment of Officers and MTAs from the eligible list.
- Reinstatements to Officer for cadets rejected from the Basic Academy.
- Coordination of requests for CI&I SSCH from State DOJ. See DOM 31060.18.

31060.9.1.1 Hiring Authority Responsibilities

Assuring that no peace officer is appointed prior to receiving the appropriate clearance documents from S&SB.

Each Warden shall assign a recruitment coordinator and a recruitment team to conduct local recruitment activities for Officer and MTAs. See DOM 31060.9.2.2.

Each Warden shall assign a liaison to the appropriate testing center. The liaison is to provide staff members to serve as state representatives on qualifications appraisal panels.

31060.9.2 Peace Officer Recruitment

Various federal and state laws, executive orders, and court decisions regulate California civil service employment and provide the basis for recruitment programs.

Goals and Objectives

The Department is committed to an aggressive EEO Program, recognizing the need to employ all segments of the population. All recruitment activities shall include good faith efforts toward meeting the Department's Affirmative Action goals and timetables.

The Department intends to:

- Use to the maximum all available human resources.
- Provide EEO to all on the basis of merit and fitness, without regard to age, sex, race, national origin, religion, disability, sexual orientation, or political affiliation.
- Achieve and maintain a work force which represents by occupational group, responsibility level, and salary level the diverse ethnic and cultural groups found within the State.
- Attract qualified applicants to compete for appointment in the Department.
- Increase the overall effectiveness of our law enforcement community.
- Increase qualified minority group/affirmative action representation within the Department's law enforcement community.
- Enhance the Department's public image through advertising in all phases of the media, personal contacts with citizens in the community, and enlightening the public with regard to the operations of the Department.

31060.9.2.1 S&SB Responsibilities

The S&SB shall:

- Report on the ethnic sex representation of the Officer, MTA, PA-I, and CC-I examination applicant pool.
- Place paid advertisements as needed to publicize the Officer, MTA, Parole Agent I, and CC-I examinations.
- Develop, maintain, and use a mass mailing roster of community based agencies to publicize the Officer, MTA, PA-I, and CC-I examinations.
- Refer announcement and solicitations regarding job fairs and other recruitment related activities to the institution recruitment coordinator nearest the event.
- Serve as a resource to departmental managers, supervisors, and recruitment coordinators.
- Evaluate departmental recruitment efforts for Officer, MTA, PA-I, and CC-I.

31060.9.2.2 Institution/Parole Responsibilities

ID and P&CSD staff perform specific recruitment activities tailored to meet the needs of their respective communities as well as those with statewide impact.

31060.9.2.2.1 Recruitment Coordinator Responsibilities

Each Warden and RPA shall identify a recruitment coordinator who shall:

- Be the contact person for recruitment matters.
- Server as a liaison between the field and the S&SB.
- Assist the Warden or RPA to select and assign recruitment team members.
- Provide OJT to recruitment team members.
- Have functional responsibility for the recruitment activities within their respective area.
- Identify and coordinate local recruitment efforts.
- Coordinate with neighboring institutions to avoid a duplication of effort.
- Work with community organizations to enhance recruitment efforts.
- Develop a speaker's bureau for local recruitment efforts.
- Conduct workshops and tours of facilities.

31060.9.2.2.2 Recruitment Team

Recruitment team composition shall reflect recruitment goals. Sex and ethnic balance is critical if the public is to perceive the recruitment effort as a credible demonstration of commitment to equal employment opportunities.

Selection

- Selection of staff for the recruitment team shall be based on their:
- Expressed and/or evident motivation and interest in recruitment, EEO, and affirmative action concepts.
- Knowledge of minority community organizations and resources.
- Having the necessary knowledge and background to provide accurate reliable information.
- Experience as a law enforcement professional.
- Possessing the skill and ability to:
    - Speak effectively.
    - Establish rapport with the minority community.

- Deal tactfully with the public.
- Be assertive.
- Be cooperative.
- Project a professional image.

Experience

Three years of experience as a departmental peace officer is the standard but exceptions may be make based on special expertise or qualifications.

Minimum Number

- Facility recruitment teams shall have a minimum of six members.

Training

The recruitment coordinator shall provide OJT to recruitment team members.

The "CDC Recruitment Training Manual" contains specific recruitment training components.

Supervision

Recruitment team members shall receive direct supervision from the recruitment coordinator for local activities.

Behavior

While assigned as a recruited, staff persons are temporarily on a special assignment. Their demeanor shall demonstrate a high degree of professionalism and respect for all persons in the community. They shall:

- Be attentive and cooperative.
- Provide full participation in all recruitment efforts.
- Not become short-tempered or argue with any citizen while on duty.
- Respond by indicating that they do not know the answer to a specific question, if an answer to the question is unknown.
- Maintain the exhibit area in a neat, clean, and orderly manner, free from food and trash.
- Report to work on time and remain at the exhibit unless instructed otherwise by the supervisor.
- Not eat, drink, smoke, or sit down while at the exhibit area. Rest periods and meal breaks shall be scheduled.
- Not use slang or inmate jargon in communicating with the public.

Uniformed Staff Attire

While participating in recruitment activities, uniformed staff attire consists of:

- Full Class "A" uniform (e.g., slacks and jacket) unless instructed differently. During summer months, the short sleeve uniform shirt may be worn without Class "A" jacket or tie.
- Uniforms shall be neat, clean, and properly pressed.
- All buttons shall be fastened at all times.
- A tie shall be worn with any long sleeves (e.g., uniform jacket or shirt).
- The "gig-line" on the uniform shall be maintained.
- A regulation name tag shall be worn over the upper-right shirt pocket.
- A badge shall be worn above the left shirt pocket or on outside of Class "A" jacket, when worn.
- A whistle shall be worn on the right shirt pocket.
- Regulation black socks (or flesh-tone hosiery for women) shall be worn.
- Shined, black, plain-toe shoes shall be worn.

Non-Uniformed Staff Attire

- If a person's current classification is a non-uniformed assignment, dress shall be conservative business attire:
  - Men: Suit or sport coat, slacks and tie.
  - Women: Business-appropriate dress, blouse and skirt, or pantsuit.

Grooming

Hair shall be clean and neatly arranged. Facial hair shall be limited to neatly trimmed mustaches. Sideburns shall not extend below the ear lobe.

31060.9.3 Peace Officer Appointment Process

Except for list appointments for officer and MTA, the hiring authority shall appoint persons to peace officer positions. The hiring authority is to assure that all legal and policy requirements are met prior to the effective date of the appointment.

31060.9.3.1 Selection and Standards Clearances

The hiring authority is to obtain the necessary S&SB clearances (DOM 31060.8.2.1) prior to appointing to a peace officer position any applicant who is not currently a departmental peace officer employee by submitting the CDC Form 1923, to the appropriate testing center.

31060.9.3.2 Testing Center Service Areas

Northern Testing Center:

- PBSP.

- CCC.
- FSP.
- SAC.
- CMF.
- SOL.
- NCWF.
- SQ.
- MCSP.
- Parole Region I.
- Parole Region II.
- Headquarters.

Central Testing Center:

- SCC.
- DVI.
- CCI.
- COR.
- WSP.
- NKSP.
- ASP.
- PVSP.
- CCWF.
- VSPW.
- CMC.
- CTF.

Southern Testing Center:

- LAC.
- CIM.
- CIW.
- CRC.
- RJD.
- CVSP.
- ISP.
- CEN.
- CAL.
- Parole Region III.
- Parole Region IV.

31060.9.3.3 Service Request Process

The CDC Form 1923 shall be:

- Signed by the IPO; Business Manager; Associate Warden, Business Services; Chief Deputy Warden; Warden; PA, RPA, Assistant Deputy Director, Regional Administrator; Assistant Director; or Deputy Director.

A bona fide job offer to the applicant.

The following shall be included with the service request:

- A copy of the STD Form 678 and all submitted attachments.
- A copy of the CDC Form 1951, Law Enforcement Questionnaire .
- Three completed fingerprint cards using DOJ, CI&I Form 7.
- A completed Personal History Statement .

The Chief, S&SB, will notify the hiring authority if clearance for hire is granted or withheld by completing and forwarding a CDC Form 2011, Services Request Follow-up Transmittal .

If the hiring authority disagrees with the chief, S&SB, the decision may be appealed to the Chief Deputy Director through the appropriate Deputy Director.

The written appeal shall be routed to the Chief Deputy Director by the Deputy Director, ASD, for a recommendation.

The Chief Deputy Director’s decision shall be returned by the Deputy Director, ASD.

The Deputy Director, ASD, shall forward copies of the decision to:

- The submitting Deputy Director.
- The Chief, S&SB.

31060.10 Basic Academy

All appointees to the class of officer must attend the Basic Academy. Effective dates of appointments are to coincide with the first date of the Basic Academy they are to attend.

Exceptions

Reinstating officers whose last departmental position was officer and whose break in service was less than one year. The Warden can require attendance if the training is deemed necessary.

Reinstating officers exempted from Basic Academy attendance by the Chief Deputy Director.

Officers reinstated because of a mandatory reinstatement. The Warden can require attendance if the training is deemed necessary.

31060.10.1 Permanent Intermittent Officers (PI)

PI Officers shall be given priority consistent with list eligibility or SPB Rule 277 for permanent full-time vacancies.

Within two weeks of the start of each Basic Academy, the S&SB will issue a notice to the Wardens of the eligibility standing of the PIs for full time positions.

31060.10.2 Hardship Transfers

All new officers shall complete the probationary period at the facility of their initial assignment except those Officers who demonstrate a hardship may be considered for transfer to another facility. Officers attending the Basic Academy requesting a hardship transfer shall submit a request to the Chief, S&SB. All other officers requesting a hardship transfer shall submit requests to the Warden of the proposed and the releasing facility. (See DOM 3310.21.1 for process.)

31060.11 Non-peace Officer Background Investigations

Background investigations on applicants for non-peace officer classifications shall be limited to those applying for the following classifications:

- Dentist.
- Chief Dentist.
- Staff Psychiatrist.
- Senior Psychiatrist (Specialist).
- Senior Psychiatrist (Supervisor).
- Chief Psychiatrist, Correctional Facility.
- Staff Psychologist (Counseling).
- Staff Psychologist (Clinical).
- Senior Psychologist (Health Facility Specialist).
- Senior Psychologist (Health Facility Supervisor).
- Chief Psychologist, Correctional Facility.
- Physician and Surgeon.
- Chief Physician and Surgeon.
- CMO, Correctional Facility.
- Assistant Superintendent, Psychiatric Services, Correctional Facility.
- Deputy Superintendent, Clinical Services, Correctional Facility.
- Chief, Medical Services, Correctional Program, CEA.
- Correctional Case Records (complete series).

A background investigation clearance shall not be required prior to appointment to these positions.

Process

The hiring authority shall:

- Ensure the applicant completes the CDC Form 1951-B.
- Ensure the hiring interview includes appropriate questions. (See DOM 31060.17.)
- Inform the potential employee that:
  - A background investigation is required.
  - Based on the investigative results, the employee may be rejected from probation or terminated through the adverse personnel action process.
  - Cooperation with BIS requests for information is required.
  - A deliberate attempt to obstruct the investigation shall result in a recommendation for rejection from Probation.
  - The employee shall complete a Personal History Statement.
- Make a commitment to the prospective employee. Process the necessary personnel paperwork to effectuate the appointment.
- No more than 15 days after the appointment, forward to the appropriate Regional Testing Center a service request with the following enclosures:

- A copy of STD Form 678 and all submitted attachments.
- A copy of CDC Form 1951-B.
- Three completed fingerprint cards.
- A completed personal History Statement.

The Chief, S&SB, will notify the hiring authority of the results of the background investigation. The hiring authority will determine what action, if any, is required.

31060.12 Good Faith Civil Service Appointments

A valid civil service appointment is made and accepted in "good faith" under the civil service statutes and SPB rules.

To Make a Valid Appointment

In order to make an appointment in "good faith," the Director and the designated hiring authorities shall meet the following requirements:

- Intend to observe the spirit and intent of the law.
- Make a reasonable and serious attempt to determine how the law is applied.
- Assure that positions are properly classified.
- Assure that appointees have civil service appointment eligibility.
- Intend to employ the appointee in the class, tenure, and location to which appointed under the conditions reflected by the appointment documents.
- Assure the Personnel Transactions staff have reference materials, training, and supervision necessary to avoid mistakes.
- Respect the rights and privileges of other persons affected by the appointment; avoid any appearance of coercing an eligible to waive rights to an appointment.

In order to accept an appointment in "good faith," an employee shall:

- Intend to serve in the class to which the employee is being appointed under the tenure, location, and other elements of the appointment as reflected by the appointment document.
- Provide the appointing power with complete factual and truthful information necessary for a proper appointment.
- make a reasonable attempt to seek correction of any aspects of the appointment that the employee knows are illegal.

31060.12.1 Sanctions for Violating Good Faith Requirements

Any officer or employee who knowingly violates or directs any officer or employee to violate these provisions shall be subject to any or all of the following:

- Adverse action.
- Civil sanctions.
- Criminal sanctions.

The SPB Executive Officer may cancel an illegal or improper appointment if lack of "good faith" exists on the part of either appointing power or employee.

31060.13 Request to Appoint Into a Different Location

When making appointments to positions that are rostered in a different location than the hiring authority, the hiring authority shall use the agency code where the position is rostered on its internal appointment request document.

- This occurs, for example, when an employee of the Education and Inmate Programs Section works at the CIM, and the position is actually rostered in Sacramento County.
- This separate identification is critical for audits and seniority list requests. Seniority lists must accurately reflect all employees in affected classes and their locations.

31060.14 Contacting Eligibles on Certification Lists

Eligibles from certification lists shall be contacted by the following methods only (see SPB Rule 258 for applicable time limitations):

- The STD Form 616 shall be mailed to the eligible's home address.
- Telegram and mailgram may only be used when the vacancy requires filling in a short period of time.
- Telephone or verbal contact with results confirmed in writing to the eligible.

The FAX shall not be used.

31060.15 Oath Of Allegiance/ Declaration of Permission to Work

The STD Form 689, Oath of Allegiance and Declaration of Permission to Work for Persons Employed by the State of California, shall be signed by every employee within thirty days of appointment.

Citizen

U.S. citizens shall sign the Oath of Allegiance; which shall be valid until the employee permanently separates from State employment. Validation may be made by the following:

- Executive staff, hiring authorities, personnel assistants, and those in the direct chain of command of the personnel assistants.
- Anyone who by law has the authority to administer oaths (i.e., public notaries; the Attorney General; judicial officers; and county officers like the DA, sheriff, county clerk, or justice of the peace).

No fee shall be charged by any person before whom the Oath is taken and subscribed.

Noncitizen

Non-citizen employees shall complete the Declaration of Permission to Work.

If a legally employed non-citizen becomes a naturalized citizen, the Oath of Allegiance shall be completed.

31060.16 Federal Employment Eligibility Verification

All applicants hired after November 6, 1986, shall complete and sign a USINS Form I-9 before being appointed.

Staff shall review and verify in accordance with directions on the back of the form.

The S&SB shall:

- Ensure completion, review and verification for all entry-level peace officer applicants including lateral transfers and reinstatements.
- Forward the completed forms to the appropriate local personnel/payroll office.

Local personnel/payroll officers shall:

- Ensure completion, review and verification of applicants for all other classifications.
- File and retain the forms (see Section 31060.20).

31060.17 Interviews

In keeping with the merit system principle of appointing the best person available, hiring authorities shall interview at least three persons interested in a vacancy before an appointment is made. Exceptions occur under the following circumstances:

- There are less than three persons interested.
- The appointment is a result of the reclassification of a position already filled by an employee who is eligible for appointment to the higher position. This refers only to true promotions in place, as defined in Section VI of the California State Restriction of Appointments Policy and Procedure Manual.

At the discretion of the hiring authority, interested persons whose names appear above the person to be appointed from a certification may be interviewed. The exception is for employment lists established by education and experience ratings. If this is the case, all eligibles on the list must be contacted for a hiring interview. Those persons interested must be interviewed for the vacancy. If there are compelling circumstances, mandatory interviews may be waived by the personnel officer.

Peace Officer

All peace officer applicants shall be interviewed by an appropriate official prior to selection.

The STD Form 678 shall be carefully reviewed with the applicant.

Before a commitment to hire is made, any of the following shall be brought to the attention of the hiring authority:

- Arrest for or conviction of a criminal offense.
- Dismissal or suspension by a former employer.
- Other than honorable discharge from the military.
- Any record of employment with an organization whose operations are incompatible with the policy or philosophy of the Department.

Non-Peace Officer

The STD Form 678 and the CDC Form 1951-B shall be carefully reviewed.

In addition to interview questions, the following areas my be questioned if additional information is needed from the CDC Form 1951-B:

- Complete arrest and conviction history.
- Educational achievement.
- license status if applicable.
- Specified nonpeace officer positions require a background investigation (see DOM 31060.9.4.3).

Interviewer Response

Those who express interest in a particular vacancy shall be notified by letter from the hiring authority or designee when someone else has been selected. They shall be told:

- Who was selected.
- Why the other person was selected or they were not selected.
- Any other information that can be shared with them.

Rejected Applicants

If a rejected applicant alleges discrimination in hiring, all records dealing with filling the position (including interview notes, rejection letters, etc.) shall be used to establish the Department's position. The burden of proof falls on the rejecting employer in discrimination cases.

Official Assignments

Wherever possible, departmental employees who are to be interviewed for appointment at another geographical location within the Department shall be given assignments which enable them to make such trips on official business as staff development is an important secondary goal.

Report

These assignments must be specific in nature with a report required. They may be concerned with any phase of departmental activity including evaluation of specific internal procedures in specialized areas. Interchange of process information is encouraged.

Transportation and Accommodations

Ordinarily, travel under such circumstances shall be by State car rather than commercial transportation. Employees are expected to make maximum use of facilities accommodations to keep expenses at a minimum.

It is in the best interest of the Department that an employee not be denied a promotion because of financial pressures which make it difficult to appear for interview at personal expense.

31060.18 Criminal Records Check

A criminal records check is a requirement for employment with the Department and includes:

- Consent to be fingerprinted.
- Request for and review of the CI &I SSCH.

Process

Applicants for all employment shall be fingerprinted at the earliest possible time if an appointment is expected. The fingerprints shall be processed as follows:

- Local personnel staff shall submit two copies of the fingerprints directly to the BIS.
- ***Note***: The facility/office region acronym shall be written in the space titled "Your No. OCA" on the front of the card.
- The BIS shall forward them to State DOJ.
- BIS returns DOJ responses to the originator of the request.
- The hiring authority or designee shall review, note action taken, sign and date the response, and file it in the individual's official personnel file.
- The CCRM shall review fingerprint responses for persons appointed to positions which allow access to inmate records or EDP terminals capable of access to electronically stored inmate records.

31060.19 Pre-Employment Documentation

The following records shall be on file in the local personnel/payroll office prior to appointment of an applicant:

- CI&I SSCH.
- Fingerprint card.
- USINS Form I-9.
- Physical examination report.

31060.20 Retention of Personnel Records

All applications; supplemental applications; personnel, membership, or employment referral records; and files of applicants shall be retained a minimum of two years in a confidential file.

Unsolicited applications are excluded from the retention requirement.

Transferring Employees

The following documents are retained in the separated employee's folder once the employee transfers:

- One copy of the CDC Form 647 or CDC Form 647-A.
- One copy of the STD Form 612, Transfer Data Sheet.
- A Copy of any STD Form 642-A, Leave Record Cards.
- A copy of the separation checkout list (if used).

Other material in the official Personnel Folder shall be purged according to the SAM 1670 and the remaining contents forwarded to the receiving location.

Employment Eligibility Verification Forms

USINS Form 1-9 shall be:

- Maintained in a file separate from the Official Personnel Folder.
- Retained for three years after the date of employment or for one year after termination of employment, whichever is later.

No Longer Interested Notification Forms

A DOJ, CI&I Form 8302, No Longer Interested Notification (NLI) Form, shall be submitted to State DOJ by each personnel section on any of the following who were fingerprinted at the time of application or appointment:

- Employees who are terminated or separated from the Department.
- Contracted workers, volunteers, vendors, or other service providers whose services are no longer required by the Department.
- Applicants who were fingerprinted but not hired by the department.

NLI Forms should not be sent to DOJ on retired employees.

31060.21 Photographs

Current photographs shall be taken of all employees.

One photograph shall be used on the employee's personnel identification card. (See DOM 31070.)

One photograph shall be placed and retained in the employee's Official Personnel Folder.

Responsibility

The Personnel Transactions Section shall photograph headquarters' employees.

Facility personnel/payroll offices shall photograph facility employees.

Parole regions shall photograph their employees and forward one photograph to Personnel Transactions Section.

31060.22 Employee Exit Questionnaire

The Employee Exit Questionnaire is a tool designed to examine employee movement from and within the Department.

Responsibility

The responsibility for the Employee Exit Questionnaire rests with the Personnel Services Section.

On-site coordinators within each division, facility, and parole region shall be responsible for coordinating the distribution of the questionnaire to all employees transferring, leaving, or changing classifications. If the responsibility for coordinating the distribution of the exit questionnaire is reassigned, the name of the new survey coordinator shall be provided to the Personnel Services Section promptly.

Completion of the questionnaire is voluntary. Names shall not be used and a self-addressed envelope shall be provided for mailing the questionnaire directly to headquarters.

Information from the questionnaire shall be reviewed and evaluated by staff from the Personnel Management Branch. The results and findings of the questionnaire shall then be reported to management on a regular basis.

If an employee wishes, an exit interview may be made by the employee with the Personnel Services Section.

31060.23 Revisions

The Deputy Director, ASD, or designee shall be responsible for ensuring that the contents of this section are kept current and accurate.

31060.24 References

PC § 830 and 830.6(b).

CCR (2) (1) §§ 8, 212, 258, 277, and 300 - 304, 599.810.

CCR (15) (3) § 3291(b).

GC § 1029, 1029.1, 1031, 7290 - 7299.8, 12946, 12976, 18150, 18157, 18158, 18522, 19080 - 19083, 21153.

SAM § 1670.

ARTICLE 7 — PERSONNEL IDENTIFICATION CARDS

Revised October 4, 1994

31070.1 Policy

In order to maintain security and order within Department facilities and provide proof to other agencies and private citizens of an individual's relationship with the Department, departmental identification cards or memorandums shall be issued to employees, contractors, consultants, volunteers, advisory group members, and Department retirees.

31070.2 Purpose

This section specifies the procedural requirements for issue, retrieval, and control of departmental identification cards or memorandums.

31070.3 Definitions

For this section only the following definitions apply:

- Employee: person who works directly for the CDC.
- Individual: employee, volunteer, CDC retiree, consultant, contractor, or advisory group member.

31070.4 Responsibilities

Local personnel/payroll and regional parole offices shall:

Issuance

- Order, securely store, and issue identification cards.
- Verify completion of preemployment documentation (i.e., criminal records check, medical examination/health questionnaire, etc.). [See DOM 31060.]
- Maintain the hiring authority's record of issuance and retrieval of identification cards.

Individuals or the designated authority shall sign the record book for each identification card issued them. Individuals shall, while on duty and/or while on the grounds of a Department facility, carry their identification cards on their person and produce the card upon request.

Retrieval

Individuals shall surrender the identification card to their supervisors, local personnel/payroll offices, or designated regional parole offices under the following circumstances:

- On or before the expiration date shown on the card.
- Upon separation from the Department.

An employee transferring, promoting, or demoting within the Department shall retain the identification card until a new card is issued.

- The receiving facility, parole region, or headquarters shall collect and void the old identification card by cutting off the signature without removing the card number.
- The voided card shall be returned to the sending location for destruction. The date of destruction is entered in the record maintained by the sending location.

Record Book

Each hiring authority, by the local personnel/payroll office or regional parole office, shall maintain a binder or bound book for a record of information on the issue, return, and disposition of each identification card. Each type of identification card shall be logged in a separate section. This record shall include the following columns:

- Name of individual.
- Class title.
- Date issued to the individual.
- Serial number (on white 5-year and beige volunteer cards only).
- Signature of individual or designated authority.
- Public Employment Representative Board or PERB designation, (i.e., management, supervisory, confidential, or rank and file).
- Expiration date.
- Date card is destroyed because of expiration, separation, or transfer or is replaced because the card was lost, stolen, or mutilated.

31070.5 Features

Photograph

An identification card with photograph shall be provided within 30 days of appointment. A 30-day, white temporary card shall be issued if an identification card with photograph cannot be provided within 24 hours of appointment.

Lamination

All identification cards are laminated except the 30-day, white temporary card.

Titles

Civil service or exempt class titles shall be used on identification cards for all departmental employees with the exception of Career Executive Assignment positions in which case working titles are used.

31070.6 Ordering Blank Cards

With the exception of community volunteer cards, local personnel/payroll office and regional parole office shall request blocks of blank identification cards from the Personnel Operations Section, ASD, headquarters.

The Personnel Operations Section shall maintain a record of the cards issued. Local personnel/payroll and regional parole offices shall record and issue individual cards.

Community Volunteer Identification Cards

Upon request, the OCR Development shall:

- Record and issue blocks of beige, community volunteer cards to each facility and the P&CSD. Local personnel/payroll and regional parole offices shall maintain a record of the individual cards issued.
- Record and issue individual beige, community volunteer cards for headquarters.

31070.7 Distribution

Identification cards shall be distributed consistent with Departmental standards.

31070.8 Lost Cards

Process

Any individual who loses the departmental identification card shall immediately report the loss to the Warden, RPA, or division administrator.

Notice

When an individual reports the loss of an identification card, the facility, parole region, or division shall:

- Send a notice to all other facilities advising of the loss, the individual's name and type of identification card, and any information relevant to possible misuse of the card.
- Forward a copy of the notice to the Business Services Unit in headquarters.

The notice shall specify: "Should anyone attempt to use the lost identification card to gain entrance to your facility, please confiscate the card and notify this facility/region/division at once."

If a card is mutilated, lost, or stolen, a new card shall be issued immediately.

31070.9 Revisions

The Deputy Director, ASD, or designee shall be responsible for ensuring that the contents of this section are kept current and accurate.

31070.10 References

CCR (15) (3) §§ 3291 and 3414.

PC § 12027.

DOM §§ 31040, 31060, 33010, and 55050.

ARTICLE 8 - LEAVE CREDIT AND OVERTIME MANAGEMENT

Effective September 20, 2000

31080.1 Policy

The California Department of Corrections (CDC) shall manage employee leave credits and overtime use in a manner that provides efficient control, accountability and fiscal responsibility.

31080.2 Purpose

This article provides standard policy and practices to ensure that CDC employees understand their role in the efficient management and use of leave credits and overtime.

Included in this article are directives to ensure that employee overtime is allowed only when required to provide the safe and efficient operation of CDC.

If any provision in this article is in conflict with collective bargaining agreements, the collective bargaining agreements shall prevail as they relate to the specific represented group.

31080.3 Definitions

Sick Leave

Sick leave is the absence of an employee or qualifying family member due to illness or injury, which is serious enough that the employee is unable to work.

Vacation

Vacation is planned time off work with pay, using accrued vacation or annual leave credits, or other leave credits, excluding sick leave. The limit on the number of hours that may be accumulated during a calendar year is established by:

- The appropriate collective bargaining agreement for represented employees.
- Department of Personnel Administration (DPA) rules for non-represented employees.

Holiday

Official State holidays are those days declared in accordance with DPA rules or by gubernatorial proclamation. Provisions are applied in accordance with DPA rules and applicable collective bargaining agreements.

Overtime

Overtime is critical and unavoidable work scheduled outside of the normal work hours of an employee, for which payment is at a higher level than usual earnings as defined in the various collective bargaining agreements for represented employees, or by the Fair Labor Standards Act (FLSA) for non-represented employees.

Depending upon their Work Week Group (WWG) designation, managers and employees exempt from FLSA or collective bargaining agreement provisions may not be eligible for overtime compensation regardless of the number of hours worked.

31080.4 Institutional Overtime/Sick Leave Management Review Process

Each Warden shall establish an Overtime/Sick Leave Management Review (OSLMR) Process. In this process, managers and employees from custody and business services shall meet and evaluate the institution's custody overtime management and sick leave use on a daily basis. The Warden, or designee, shall chair the OSLMR meeting. The managers and employees shall assess the institution's progress toward reducing overtime and sick leave usage reduction goals, in accordance with this article, and review all overtime expenditures on a monthly basis.

In order to document the OSLMR, managers and employees shall maintain meeting minutes. The minutes shall include the date of the meeting, participants' names and civil service classifications, and the general findings/actions. The minutes shall not include confidential employee information.

Sick Leave Management Duties

The managers and employees shall review absences from the previous day to determine if coverage was appropriate and shall:

- Assign specific supervisors the responsibility for following-up on the welfare of an employee who appears to be developing a recognizable pattern of sick leave use/abuse (e.g., frequent days in conjunction with weekend/regular day off), or for any other reason as determined by the review process.
- Update the Bargaining Unit 6 Extraordinary Use of Sick Leave (EUSL) list to include those employees who have established a pattern of extraordinary sick leave use/abuse pursuant to the collective bargaining agreement. The agreement specifies that a pattern of "Extraordinary Use of Sick Leave" exists if an employee has more than five (5) occasions of sick leave usage which total nine (9) or more days of sick leave use within the prior twelve-consecutive-month period. Or, if an employee has three (3) or more separate occasions of sick leave in the prior twelve-consecutive-month period in conjunction with his/her established regular days off. Or an employee attempts to use sick leave on a date which the employee previously requested a different form of leave covered by the collective bargaining unit agreement, but was denied. Employees who participate in the Annual Leave Program shall not be placed on the EUSL. Sick leave used under the Family Medical Leave Act (FMLA), California Family Rights Act (CFRA), or California Labor Code (LC), Section 233 shall not be considered when determining if a pattern of extraordinary use of sick leave exists.

Overtime Management Duties

The OSLMR shall review the previous days' use of overtime due to unplanned absences to determine if all reasonable alternatives were considered before overtime was authorized, and if overtime was necessary to maintain the safe and efficient operation of the institution/region or affected area.

This review will utilize information from the Watch Office Tracking System, Personnel Post Assignment Schedule System, and any other available information, which would provide relevant data.

31080.5 Non-Institutional Overtime/Sick Leave Management

In areas other than institutions/facilities (e.g., Parole Regions; Headquarters; Health Care Services operations within institutions), where overtime and sick leave usage are high, a review process similar to that of the OSLMR shall be utilized to monitor these activities on a monthly basis.

31080.6 Institutional Overtime Avoidance Pool

Each institution shall develop an Overtime Avoidance Pool (OTAP) consisting of permanent full-time employees. The number of permanent full-time employees in the OTAP will vary by institution, and must be re-evaluated and adjusted regularly (at least quarterly) based on the needs of the institution. The number of OTAP permanent full-time employees needed in a specific classification at an institution is determined by:

- Establishing the average number of permanent full-time employees, by watch and classification, who have been absent during the previous 12-month period due to the following:
    - Long-term sick.
    - Industrial Disability Leave.
    - Non-Industrial Disability Leave.
    - Other extended leave.
- Adding this average to the fewest number of daily sick calls, by watch and classification, in the prior six-month period.
- Subtracting the number of sick leave relief positions already established and filled in those classifications with budgeted sick leave relief.
- Adding the fewest number of overtime positions paid on a daily basis for ongoing assignments which are in addition to the Post assignment schedule in the previous three months. (Examples might include: transportation, hospital guarding.)

31080.6.1 Appointment of the Overtime Avoidance Pool

The Personnel Office shall make appointment of OTAP positions in the following order:

- Into vacant positions not identified in the Institutional Vacancy Plan, or otherwise identified as "salary savings" as defined in collective bargaining agreements.
- Into Institutional Vacancy Plan or "salary savings" positions.
- Into the 902 Temporary Help Blanket.

OTAP employees shall be assigned to specific watches, with varied hours, and regular days off, and used exclusively for overtime avoidance.

31080.7 Leave Credit/Overtime Appointing Authority Responsibilities

Each appointing authority shall have overall responsibility for the management and control of employee leave credit (holiday, vacation, annual leave, sick leave and other accrued leave) use and overtime management in his/her assigned area of responsibility, and shall:

- Ensure that all managers and supervisors are informed of leave credit, overtime management, and vacation scheduling procedures as outlined in this section, collective bargaining agreements, DPA rules, all applicable laws and rules, including but not limited to FLSA, FMLA, CRFA, and LC, Section 233.
- Provide managerial oversight of the sick leave, vacation, overtime and vacancy management process to ensure that it is applied in a fair and consistent manner which conveys to all employees the importance of prudent leave credit use.
- Ensure employees are allowed to use leave credits consistent with their classification, budgeted relief, and operational considerations relative to the efficient operation of the institution and impacted work areas.
- Ensure that vacation/annual leave balances are monitored so that employee leave balances shall not exceed the maximum allowable. When it is determined that an employee's balance has, or will exceed the maximum allowable, additional opportunities to take time off during the calendar year shall be allowed.
- Ensure that sufficient OTAP positions are established and filled in order to cover anticipated absences above the budgeted relief.

1080.7.1 Leave Credit/Overtime Managers and Supervisors Responsibilities

Each manager/supervisor shall have direct responsibility for the management and control of employee leave credit use and overtime management in his/her assigned area of responsibility, and shall:

- Be knowledgeable of all aspects of the Department's leave credit and overtime management policy, including the vacation scheduling, sick leave, and overtime approval processes.
- Be knowledgeable of all aplicable laws, rules, regulations, California Government Code and collective bargaining agreements.
- Ensure that employees are aware of the method to request and schedule holiday, vacation, or other leave in accordance with this article.
- Within two working days from the time the supervisor receives sufficient information to make the determination that the leave is FMLA/CFRA qualifying, notifying the employee that the leave is being tentatively designated FMLA/CFRA leave (pending medical certification of a serious illness) and that the leave is being counted against their FMLA/CFRA entitlement. A verbal notice must be followed up in writing by the next payday or within two calendar weeks (whichever is later). If the employee takes leave for a reason that is FMLA/CFRA qualifying but the employee does not qualify for FMLA/CFRA leave, the supervisor must notify the employee within two business days after the employee requests the time off. Failure to notify the employee of non-qualification automatically qualifies the employee for FMLA/CFRA leave regardless of length of service or hours physically worked.
- Provide that all budgeted employee positions, (not designated for salary savings, or included in the Institution Vacancy Plans), are established, filled and assigned to cover employee absences in such a manner as to avoid unnecessary overtime expenditures.
- Pre-approve all overtime and ensure that every alternative has been considered prior to granting overtime approval.
- Designate the level of approval required for authorizing overtime.
- Determine the maximum number of employees in various classifications that can take vacation and/or holiday leave at the same time within the assigned work areas.
    - For posted positions, the budgeted relief for those positions determines this number.

Sick leave management responsibilities include, but are not limited to:

- Monitor the effect of sick leave related absenteeism within the assigned work area, in order to mitigate this effect whenever possible.

- Maintain accurate records of employee absences relating to sick leave and evaluating these absences to determine if there is a pattern of use/abuse developing which needs to be discussed with the employee.
- Take calls from employees who call in sick, and at that time, when appropriate, notify the employee that verification from a physician or other licensed practitioner must be submitted in accordance with collective bargaining agreements, and all other applicable laws, rules and regulations.
- Redistribute the absent employee's workload, when necessary, to ensure that priority work is completed on deadline.
- Ensure that CDC Form 998-A, Employee's Attendance Record, is received from each employee as required, and that, where applicable, substantiation is attached. Approve the employee's CDC Form 998 for use of leave credits only after having ascertained that the absence is for an authorized reason. If disapproved, the reasons for the disapproval will be given to the employee in writing.
- Set a good example for employees by using sick leave only when absolutely required for personal and family medical cares.

Vacation and Holiday leave credit management responsibilities include, but are not limited to:

- Review the monthly list of vacation/annual and holiday leave credit balances sent out by the Personnel Office for employees assigned to their work areas, and determine which employees are near or over the maximum allowable number of accrued leave credits.
- In the Institutions, designate whether requests from Correctional Officers, Sergeants or Lieutenants to use holiday leave credit will be submitted in writing or by telephone.
    - Written requests will be time and date stamped or noted upon receipt.
    - Telephone requests will be recorded electronically using a system which specifies the time the message was received.

A file/log shall be maintained noting the time and date each request was received, and whether it was approved or placed on a standby list. Designate the location(s) where employees will turn in requests to use holiday leave credit or the telephone number employees can call to request approval for using leave credit.

- Ensure that approval for an employee to use holiday leave credit does not result in overtime being required (except in an institution when a first watch commander is absent on holiday time off).
- Provide operational oversight for the leave system within his/her assigned area.
- Monitor the leave credit balances and encourage employees to use accrued leave credits throughout the calendar year in such a manner as to keep accrued balances within the established maximum limits without adversely affecting the safe and efficient operation of the work area.
- Approve requests for leave in accordance with departmental policy and procedures and the provisions of applicable collective bargaining agreements, laws, rules and regulations, based on operational need, and constraints imposed in the case of licensed employees. A written notice of approval to take leave shall be provided to employees at the time of approval.

Overtime management responsibilities include, but are not limited to:

- Maintain accurate records of employee overtime used, and track the reasons overtime was required.
- Request/authorize overtime only after ascertaining that there is an absolute need affecting the safe and/or efficient operation of the institution/facility/region/department/work area.
- Ensure that work is distributed in such a manner as to avoid the need for overtime, except in rare, unforeseen circumstances.

All overtime shall be pre-approved by a designated supervisor, who will ensure that every other alternative has been considered prior to granting overtime approval. Within an institution, being ordered to stay on post beyond the normal end of shift, or scheduled to work overtime by the Watch Office, Correctional Sergeant or Lieutenant constitutes pre-approval.

31080.7.2 Leave Credit/Overtime Personnel Office Responsibilities

The Personnel Office is responsible for the following:

- Submitting STD Form 607 to establish all budgeted positions.
- Providing Department Heads, major Work Area Managers, and the Institutional Personnel Assignment Office with a monthly listing of employees who report to them, and the accrued leave balances of those employees.
- Mailing the notice required by FMLA to employees who have been off work for several consecutive days and may be eligible under the FMLA. This shall be done by the next payday after the employee has been off for FMLA.
- Verifying that all employees are charged appropriate leave credits for all leave time off used.

Vacation Leave

- In the institutions, forwarding a list to the Personnel Assignment Office by October 1 of each year, of the current accrued vacation leave balances for Correctional Officers, Sergeants and Lieutenants. This listing will be used during the annual vacation bidding process.

Overtime Management

- Ensuring that overtime is recorded accurately and appropriate payments are made to employees.

Holiday Leave

- Informing all employees of any additional holidays declared by gubernatorial proclaimation.

31080.7.3 Institutional Leave Credit/Overtime Personnel Assignment Office Responsibilities

The Personnel Assignment Office has the responsibility to establish and fill all Correctional Officer, Sergeant and Lieutenant posts, including relief (with the exception of those in the Institutional Vacancy Plans). The Personnel Assignment Office shall schedule Correctional Officer coverage for long-term sick, long-term vacancies, vacations, or any other vacancy for which there is sufficient advance notice. Such coverage shall be assigned in such a manner as to avoid overtime whenever possible.

The Personnel Assignment Office shall have the additional following responsibilities:

Sick Leave

- Provide coverage for pre-scheduled/pre-approved Correctional Officer, Sergeant and Lieutenant sick leave absences longer than one week in duration.

Vacation Leave

- Conduct the vacation bid process and then track the vacations for the Correctional Officer, Sergeant and Lieutenant classifications.
- Ensure that the coverage provided for posted position vacations is consistant with the budgeted relief for the respective classification.

31080.7.4 Institutional Leave Credit/Overtime Custody Captain Responsibilities

Vacation

The Custody Captain has the overall responsibility for the annual vacation bidding process for Correctional Officers, Sergeants and Lieutenants as specified in the collective bargaining agreements and this article of DOM.

Holiday

The Custody Captain will approve holiday time off for Correctional Lieutenants and Sergeants based on the number of holiday relief positions assigned by watch and day, and/or the availability for cross coverage. Requests for time off will be submitted to the Custody Captain through the normal chain of command.

31080.7.5 Institutional Leave/Overtime Watch Office Responsibilities

Filling behind leave that has not been pre-scheduled/pre-approved. The Watch Office is responsible for the daily coverage for Correctional Officers, Sergeants, and Lieutenants who call in sick or for any other unplanned absence, using resources in the following priority order:

- Internal coverage (i.e., reassignment of employees when post workload has been temporarily eliminated, such as, when there are no inmates on the facility yard due to a lock down).
- Utility days.
- OTAP (including Retired Annuitants).
- Other budgeted reliefs not already assigned to cover a post for that day (e.g., sick leave, vacation, or holiday).
- Permanent Intermittent Employee (PIE).
- Voluntary Overtime.
- Involuntary Overtime.

The Watch Office is responsible for:

Sick

- Taking daily sick calls from Correctional Officers, Sergeants and Lieutenants.
- Notifying employees when a medical verification is required.

Holiday

- Handle the day-to-day administration and approval of holiday time off for Correctional Officers based on the number of holiday relief positions assigned by watch and day.

Overtime

- Ensure that voluntary and involuntary overtime is administered according to the provisions of the specific collective bargaining agreements and the regulations of the specific WWG regarding FLSA.

31080.7.6 Institutional Leave Credit/Overtime Correctional Officer Responsibilities

The Correctional Officer's responsibilities are as follows:

Holiday

- Making every attempt to use holiday credit within twelve months of accrual.
- Providing written notice at least forty-eight (48) hours prior to canceling approved holiday leave.

31080.7.7 Institutional Leave Credit/Overtime Food Manager Responsibilities

The Correctional Food Manager/Assistant; Food Manager/Supervising Cooks are responsible for the following:

Overtime

- Scheduling daily coverage for Supervising Cooks I who call in sick, or for any other unplanned absence.

31080.7.8 Institutional Leave Credit/Overtime Health Care Services Designated Supervisor Responsibilities

The Designated Supervisor at Institutional Health Care is responsible for the following:

Sick

- Taking daily sick calls from health care employees, notifying employees when a medical verification is required, and for providing daily coverage for those vacancies created by the sick call as necessary.

Overtime

- Scheduling daily coverage for Medical Technical Assistants (MTA) and Nurses, who call in sick or for any other unplanned absence. When there is no designated supervisor for Health Care Services on duty, (i.e., first watch) the Watch Office may assist in arranging coverage for MTAs and Nurses.

31080.7.9 Leave Credit/Overtime Employee Responsibilities

The employees' responsibilities are as follows:

- Submitting a completed, signed CDC Form 998-A, Employee's Attendance Record, which accurately reflects all leave taken during the month, to the Personnel Office on or before the third working day after the end of the pay period, in which the leave was taken.
- Ensuring that he/she has sufficient accrued leave credits to cover a planned absence.

Sick

- Ensuring that all sick leave requested is necessary to provide for personal medical needs or that of a qualifying family member.
- Ensuring that all sick leave requested is for an authorized reason based on laws, (including, but not limited to, FMLA, CFRA, LC 233) policy, regulations or collective bargaining agreements.
- Providing medical verification when instructed to do so in accordance with laws, policy, regulations or collective bargaining agreements.

Vacation

- Submitting a vacation request each year following the established procedures for their classification and/or assignment.
- Monitoring accrued vacation/annual leave balances and ensuring that sufficient vacation time is requested so that accrued balances do not exceed established maximums.

Overtime

- Working overtime only if this is pre-approved by the designated supervisor.

Employees who have questions about leave usage may contact the Personnel Office for further information.

31080.8 Leave Scheduling

Leave scheduling shall:

- Be consistent with the needs of the work area.
- Ensure an adequate work force to maintain the security and/or operation of the work area.
- Be by seniority as defined in applicable collective bargaining agreements, or DPA rules for non-represented employees.

31080.8.1 Vacation

The following process shall be followed for requesting and/or approving vacations:

Correctional Officers

The Personnel Assignment Office will publish a schedule of available vacation periods by October 1 of each year. The length of vacation periods may vary from institution to institution (e.g., one week, two weeks, or three weeks). Each institution will determine the vacation periods based on the number of Correctional Officers, and the number of vacation relief positions established in the budget.

Vacation request forms will be made available to Correctional Officers by October 1 of each year, which must be completed and returned to the site designated on the form within thirty (30) days of issuance. It is the responsibility of all employees to complete and submit a vacation request form each year. Correctional Officers will make their selections on the vacation request form by numbering the periods they desire in descending priority order. For example: First choice is numbered "1"; second choice is numbered "2", etc.

Each Correctional Officer will be assigned a vacation on a seniority basis, as specified in Bargaining Unit 6, collective bargaining agreements. The Personnel Assignment Office will assign any remaining vacation periods, without consideration of seniority, to Correctional Officers, who failed to submit a vacation request form or improperly completed the form.

The approved vacation schedule will be posted by December 1 of each year. Once an employee has been given an approved vacation period, he/she may not trade that vacation period with another employee as a mutual swap.

Correctional Officers may notify the Personnel Assignment Office that they wish to cancel approved vacations by submitting a written request no less than 30 calendar days prior to the scheduled vacation. Per the collective bargaining agreements for Bargaining Unit 6, Institutional employees may cancel their vacation, but may not carry over excess vacation time which may accrue as a result of the cancellation.

After the annual vacation bidding process is completed, Correctional Officers may submit requests for additional vacations should additional vacation periods open up due to cancellations, retirements, promotions, separations, employees' transferring out of the institution or other circumstances. These unexpected openings are called "standby vacations."

Correctional Sergeants and Correctional Lieutenants

The Custody Captain will publish a schedule of available vacation periods for all Correctional Sergeants and Lieutenants by October 1 of each year.

Vacation request forms will be made available to Correctional Sergeants and Lieutenants by each October 1. These forms must be completed and returned to the site designated on the form within 30 days of issuance. It is the responsibility of all employees to complete and submit a vacation request form each year.

Correctional Sergeants and Lieutenants who are assigned to posts for which there is no budgeted vacation relief will participate in the vacation bidding process along with all other Correctional Sergeants and Lieutenants. No later than 30 days before the time of the approved vacation, if it is determined that they will still be assigned to such posts at the time of their approved vacations, those vacation periods will open up as standby vacations for other Institutional employees.

Correctional Sergeants and Lieutenants will be assigned vacations on a seniority basis. Remaining vacation periods will be assigned without consideration of seniority to Correctional Sergeants and Lieutenants, who fail to submit a vacation request form or improperly complete the form. The approved vacation schedule will be posted by December 1 of each year.

Correctional Sergeants and Lieutenants may request to cancel approved vacations by submitting a written request no less than 30 days prior to the Custody Captain through the normal chain of command. Correctional Sergeants and Lieutenants projected to exceed the maximum accrual of vacation/annual leave credits in the scheduled calendar year will not be permitted to cancel vacations unless alternate vacation periods can be accommodated.

After the annual vacation bidding process is completed, Institutional employees may submit requests for additional vacations. Additional vacation periods open up due to cancellations, retirements, promotions, separations, and/or employees' transferring out of the institution or other circumstances. These unexpected openings are called "standby vacations."

Standby Vacations For Correctional Officers, Correctional Sergeants And Correctional Lieutenants

Standby vacations for which there are no existing bids will be offered to employees in the following priority order:

- Employees whose vacation/annual leave credits are over the established maximum limits, or are projected to go over these limits by the end of the calendar year, will be so notified and required to submit a plan to reduce their credits to the designated supervisor. These employees shall have first priority for standby vacation periods; with the highest priority being given to employees with the highest leave balances.
- Employees who had not been awarded vacations during the bidding process (transfers-in, employees who had not yet completed six month's of state service, employees who were off on long-term sick leave, NDI or IDL, etc.).
- Employees, who had requested additional vacations during the applicable vacation period, on seniority basis.

All Other Employees

By January 15 of each year, all employees (except Correctional Officers, Sergeants and Lieutenants) will submit to their supervisors, in writing, their vacation requests for the remainder of that calendar year through February of the following year. On or before February 15 of each year, supervisors/managers will review the vacation requests. Vacations shall be awarded based on: operational need; the safe and/or efficient operation of the work area; and the number of employees by classification that may be on vacation at the same time in the designated work area. When the number of employees requesting vacation for a specific time exceeds the number that can be on vacation at the same time, vacations will be awarded by State service seniority. Employees will be informed of the approved vacation schedule by February 20 of each year.

An employee may submit additional requests for vacation throughout the year. These will be considered on a timely basis by the designated supervisors and granted whenever possible based on operational need, and the safe and/or efficient operation of the work area.

Employees who wish to cancel scheduled vacations must notify their designated supervisors in writing no less than 30 days prior to the scheduled vacation.

By June 1 of each calendar year, represented employees whose vacation/annual leave balances exceeds or could exceed by December 31 the vacation/annual leave cap allowed by collective bargaining agreements or DPA rules, shall submit to their supervisor, for approval, a written plan to bring their vacation balance to the amount permitted prior to January 1 of the following year. If an employee fails to submit a written plan or adhere to an approved plan, the employee's supervisor shall order the employee to take sufficient vacation to reduce the actual or potential vacation balance to below the authorized cap.

If it is unavoidable that the employee cannot use the scheduled time due to emergency, sick leave, or unanticipated operational needs, the employee shall be allowed to reschedule the time to be taken off.

Employees whose vacation or annual leave balances exceed their maximum cap on January 1 may not have the excess deducted from their balances.

31080.8.2 Holiday

Refer to the collective bargaining agreement, as it shall be the controlling factor if the provisions of Government Code (GC) 19853 are in conflict.

Holidays falling on an employee's day off shall be credited to an employee pursuant to current administrative practices, collective bargaining agreement provisions, and consistent with GC 19853.

The following process shall be followed for requesting and/or approving holiday time off:

Correctional Officers

A schedule of available holiday time off for Correctional Officers shall be developed for each institution by watch, based on the number of budgeted holiday relief positions at that institution. These should be assigned proportionately among all three watches based on the number of staff assigned to each watch.

All Correctional Officers will submit requests to use holiday time off at the designated time and location, approved by the appointing authority. Generally, requests for holiday time off must be submitted no later than 30 days before the time off unless otherwise specified by the Custody Captain. Correctional Officer requests for holiday time off will be approved by the Watch Office on a first come, first served basis.

A Correctional Officer may notify the Watch Office of a desire to cancel scheduled holiday time off by submitting a written request to the Watch Office no later than 48 hours before the scheduled time off.

Correctional Sergeants/Correctional Lieutenants Assigned to Posts for Which There is Budgeted Holiday Relief:

A schedule of available holiday time off for Correctional Sergeants and Lieutenants assigned to posts with budgeted holiday relief, will be developed for each institution/work area based on the number of budgeted relief positions for that institution/work area or the availability of appropriate coverage.

Correctional Sergeants or Lieutenants assigned to posts with budgeted holiday relief will request holiday time off from the Custody Captain through the normal chain of command. Generally, requests for holiday time off must be submitted no later than 30 days before the time off. Requests for holiday time off will be approved on a first come, first served basis, for Correctional Sergeants or Lieutenants.

Correctional Sergeants/Correctional Lieutenants Assigned to Posts for Which There is no Budgeted Holiday Relief:

Correctional Sergeants and Lieutenants assigned to posts for which there is no budgeted holiday relief will request holiday time off from the designated supervisor.

Requests will be approved whenever possible, depending upon operational need and the safe and efficient operation of the institution/work area.

Requests will be approved on a first come, first served basis based on available coverage and the safe and efficient operation of the institution/work area.

All Other Employees

All other employees will request holiday time off from designated supervisors. All employees not in positions for which there is budgeted holiday relief will take the holidays off as they occur.

Requests will be approved whenever possible, depending upon operational need and the safe and efficient operation of the institution/work area. Requests will be approved on a first come, first served basis.

Full time employees who are required to work on a holiday shall be entitled to pay and/or compensating time off in accordance with the assigned WWG and collective bargaining agreement.

Less than full time employees will be entitled to partial holidays, holiday credit and/or compensation, in accordance with the assigned WWG and collective bargaining agreement.

31080.9 Family Medical Leave Act (FMLA)/California Family Rights Act (CFRA)

FMLA/CFRA established an entitlement for employees who have a minimum of twelve months of State service and who have physically worked a minimum of 1250 hours in the year immediately preceding the date the leave is to begin, to a job protected leave, for up to twelve work weeks in a twelve month period due to any of the following reasons:

- Reasons relating to pregnancy or childbirth (FMLA only);
- care of a newborn child (bonding);
- placement of a child in the employee's home for adoption or foster care;
- care for the employee's child, parent, or spouse, with a serious health condition; and/or
- employee's own serious health condition.

A serious medical condition under the definition of the FMLA is an absence of more than three days because the employee or employees family member is incapacitated. The absence involves ongoing or follow-up care by a medical practitioner, or a chronic medical condition so serious that if not treated, could reasonably be expected to result in the employee or the employee's family member being absent from work for more than three days.

An employee may elect to use any accrued leave credits in lieu of taking an unpaid leave, with the following exception:

- Where the provisions for the use of sick leave credits are met, the employee shall be required to use any available sick leave credits for his/her own serious health condition prior to substituting other leave credits (vacation/annual leave, personal leave, holiday, etc.) or going on unpaid leave.

The employee will not be required to use sick leave credits when caring for a family member with a serious health condition. The use of other leave credits for such an absence shall be at the employee's discretion.

Time taken for a pregnancy related leave does not count toward the twelve week CFRA entitlement. Approval to use sick leave credits for a birth, adoption, or foster care of a child, or to care for a child, parent, or spouse with a serious health condition is subject to the provisions of collective bargaining agreements, DPA rules and LC, section 233.

All leave taken for a non-work related illness or injury, which qualifies under the provisions of FMLA/CFRA (unpaid, covered by leave credits or Non-Industrial Disability Insurance) will be counted against the employee's FMLA/CFRA entitlement.

Leave taken pursuant to an approved work-related illness or injury will not be counted against an employee's twelve work-week FMLA/CFRA entitlement, and the employee will be notified each time this occurs.

If the request for use of FMLA/CFRA appears to meet the criteria, and the employee is eligible for FMLA/CFRA leave, the employee is to be provided with the appropriate medical certification form to forward to the treating physician and allowed a minimum of fifteen calendar days to provide the medical certification to his/her designated supervisor. The employer **cannot require** the employee or physician to provide a specific diagnosis of the condition necessitating the leave. The treating physician will determine, based on an evaluation, if the employee (or the employee's family member) has a medical condition that qualifies as "serious" under the definition of the FMLA/CFRA. An employee who has a chronic documented medical condition that necessitates being absent on an intermittent basis can only be required to furnish a medical certification no more frequently than every 30 days, and then only in conjunction with an absence. In all cases, the requirement to furnish medical certification can be no more restrictive than that outlined in the applicable collective bargaining agreements.

No absence which qualifies for leave taken under the provisions of FMLA/CFRA/LC 233 will be counted against any employee for purposes of determining excessive sick leave use/abuse or when considering the employee for promotion, out of class assignment, etc.

When compensating time off is used for FMLA absences, these are not counted toward the twelve week entitlement, so other leave credits should be used first for FMLA.

Additional details for processing FMLA is included in the CDC Family and Medical Leave Handbook. Each Personnel Officer, Employee Relations Officer and Return to Work Coordinator has copies of this handbook.

An employee who has had no sick leave usage, except under the FMLA/CFRA, in a twelve consecutive month period shall receive a "Letter of Recognition" for excellence in the area of attendance.

31080.10 California Labor Code (LC) Section 233

Under LC 233 an employee shall be permitted to use, in any calendar year, not less than one half of one year's accrual of the employee's accrued and available sick leave to attend to the illness of a child, parent, or spouse of the employee.

The employee is protected from discipline of discrimination for using sick leave for these purposes under this Labor Code.

31080.11 Revisions

The Deputy Director, Human Resources Division, shall ensure that the content of this article is accurate and current.

31080.12 References

DPA Rules

CCR (15)(3)

Collective Bargaining Agreements

Family Medical Leave Act

Fair Labor Standards Act

LC § 233

GC § 19853

ARTICLE 9 — EMPLOYEE DEATH

October 18, 1999

31090.1 Policy

The Department shall provide for the compassionate and timely response to an employee death, and shall always attempt to adhere to the wishes of the survivors.

31090.2 Purpose

The purpose of this section is to ensure the efficient, expeditious and compassionate manner in which an employee death is handled and to clarify the protocol, obligations and human side of CDC's policy to the employee's survivors.

31090.3 Disclaimer

If provisions in this section conflict with any statute or MOU, the statute or MOU shall prevail as it relates to the specific represented group. Any exceptions to this policy will be considered at the Chief Deputy Director level.

31090.4 Definitions

Active Employee

Means an employee of CDC who is not retired or otherwise transferred or separated from CDC employment.

CDC Representative

Means the employee designated by the hiring authority to represent CDC to the deceased employee's family. The representative will usually be an administrator who will exemplify CDC's compassion, sympathy and concern for the survivor's situation and who is familiar with the contents of this section.

Family

Means, solely for the purpose of this section, the spouse and other immediate family members who are beneficiaries of the deceased employee.

Hiring Authority

Means the warden, regional parole administrator, deputy director or assistant director for whom an employee works.

In-The-Line-Of-Duty Death

Means when an employee (peace officer or ancillary staff) carrying out his/her duties dies as a result of an unlawful act of an inmate or parolee (a homicide), or responding to an inmate or parolee incident.

Off-Duty Death

Means when an employee (peace officer or ancillary staff) dies while not on duty. This includes when an off-duty employee is on CDC grounds, or is traveling on official state business. An exception is when an off-duty peace officer dies while acting in an official law enforcement capacity (as determined by CDC, after a thorough evaluation of the facts surrounding the death).

When there is a question whether an employee's death is in-the-line-of-duty or on-duty, the Director will make the final determination.

An employee who dies while en route to or from work is an off-duty death.

On-Duty Death

Means when an employee (peace officer or ancillary staff) dies while at work, but not as a result of an unlawful act of an inmate or parolee, or responding to an incident. Typically, these deaths would be of an accidental nature, health-related (the result of an illness or other health condition) or result from natural causes.

Special Circumstances

Means those circumstances surrounding the death of an employee which would reasonably lead one to believe that media attention may be focused on CDC, or that person's employment with CDC (e.g., an employee who is murdered while attempting to prevent a robbery in progress).

31090.5 In-The-Line-Of-Duty Death

Notification of Family

Upon notification of an employee's death the hiring authority shall establish a team of staff to deal with the variety of associated tasks. This team may include the deceased employee's immediate supervisor, a personnel transaction representative and other members as determined by the hiring authority or his/her designee.

Whenever possible, a CDC management representative and/or the employee's supervisor shall, in-person, notify the family of the employee's death. If appropriate, a co-worker close to the deceased and a chaplain may also be present.

The CDC representative shall:

- Ask to enter the residence and inform the family in a plain and concise manner; express condolences; and provide pertinent information regarding the circumstances surrounding the death. Any questions by the family may be addressed at this time. If this notification is to be made at a family member's place of work, a private area should be arranged in advance by the CDC representative.
- Discuss with the family CDC's involvement with funeral arrangements. The family will determine the level of CDC's participation in the funeral. The CDC representative will offer the Department's assistance to the family in making funeral arrangements.
- If the deceased was a correctional peace officer, inform the family of funeral arrangement options for peace officers.
- Discuss available resources, services and benefits.
- Determine with the family if arrangements should be made for someone to remain with the family until relieved by another family member or friends.
- At the family's request, assist in arranging for child care with a provider who is acceptable to the family.
- If the family requests assistance to be isolated from the media and the public, staff may be assigned to screen telephone calls.
- As appropriate and necessary, arrange for police protection for the family.

- Arrange with the family an appropriate time to discuss all other pertinent matters.

Hospital Attendance

If the employee dies in a hospital and the family requests, the CDC representative shall transport or arrange for transportation of the family to the hospital and provide support. The CDC representative will coordinate with medical personnel to provide the family with information regarding the death. The hospital's Patient Services Coordinator will be asked to designate a private waiting area for the family. It is important for the family to be given as much information as possible regarding the death to prevent misinformation.

Notification Of Director

The employee's death shall be reported to the Assistant Deputy Director, OPM, at (916) 324-0538. The following information shall be provided:

- Employee's name.
- Civil service classification.
- Work location.
- Total state and CDC service.
- Date of birth.
- Date of death.
- Cause of death.
- Death category (in-the-line-of-duty; on-duty; or off-duty).
- Next-of-kin.
- Relationship.
- Next-of-kin's address.

The Assistant Deputy Director, OPM, shall be responsible for ensuring that the Director is notified when practical.

Notification of Governor

The death of an active employee shall be reported to the Governor's Office by the Assistant Deputy Director, OPM.

In addition, for employee deaths occurring under special circumstances, the Director may advise the Governor's Office and YACA.

Letter of Condolence - Hiring Authority

The hiring authority shall send a letter of condolence to the family.

Letter of Condolence - Director

In addition to the letter of condolence from the hiring authority, the Assistant Deputy Director, OPM, shall prepare a letter of condolence to the family for the Director's signature.

Office of Environmental Health & Safety Management (OEHSM) Responsibilities

The Office of Environmental Health and Safety Management (OEHSM) staff, or the field return-to-work coordinator, shall work with the OPM or the local personnel officer to ensure all pertinent information is provided to the family regarding workers' compensation benefits.

This shall include:

- Coordinating the completion and submission of SCIF Form 3067, Employee's Report of Occupational Injury or Illness, and SCIF Form 3301, Employee's Claim for Workers' Compensation Benefits, to the appropriate SCIF office.
- Notifying the California Department of Industrial Relations (DIR), Division of Workers' Compensation, of the employee's death and completing DIR Form 510, Notice of Employee Death. The completed form shall be forwarded to DIR, Death Without Dependents, P.O. Box 422400, San Francisco, California 94142.
- Immediately notifying the nearest district office of the Division of Occupational Safety and Health Administration of the employee's death, but no later than 24 hours after the formal notification of death. Notification information shall include:
- Time and date of accident.
- Employer's name, address and telephone number.
- Name and job title of person reporting the accident.
- Address of the site of the accident or event.
- Name and address of employee.
- Nature of injury.
- Location where injured or deceased employee was moved.
- Identify and list other law enforcement agencies present at site of accident.
- Description of accident and whether the accident scene has been preserved or altered.
- If necessary, at the direction of the hiring authority, the Employee Post Trauma Program shall be activated. Additionally, Critical Incident Stress Debriefing shall be coordinated through the EAP provider, Merit Behavioral Care of California, at the hiring authority's request.
- Information regarding the benefits available from the EAP program shall be provided to the family.

Displaying the Flag

The national flag at headquarters, parole region headquarters and each facility shall be displayed at half-mast from the time of notification of death until immediately after the employee's funeral.

Draped Badges

Upon notification of the death of an employee and until immediately after the funeral, each hiring authority may authorize his/her peace officer staff to wear their badges draped pursuant to the Department Operations Manual (DOM) Section 33020.

Funeral Arrangements

As determined by the family, CDC may or may not have some level of participation in an employee's funeral. Each employee's death will be handled on a case-by-case basis.

The CDC shall inform outside law enforcement agencies of pending funeral services and communicate the wishes of the family. The Communications Office or field PIO shall inform the media and communicate the wishes of the family.

The CDC participation in a funeral may include any one or more of the following:

- Uniformed honor guard.
- Pallbearers.
- Attendance by CDC employees.

If CDC is to participate in the funeral, staff shall coordinate as needed with the funeral director.

Funeral Attendance

Department representation at the funeral services of any employee who dies in-the-line-of-duty is desirable.

Staff may attend an employee's funeral on state time with authorization of the hiring authority. The number of employees permitted to attend the funeral shall be governed by CDC's needs.

When the funeral is beyond the immediate geographic area, the hiring authority may approve attendance on state time, using a state vehicle.

Funeral Uniform

When uniform staff who are not participating as the honor guard attend the funeral of a CDC, or other law enforcement agency, employee in an official capacity, the CDC Class “A” uniform shall be worn, including the draped departmental regulation badge. The DOM Section 33020 describes how the departmental regulation badge shall be draped and the Class "A" and honor guard uniforms.

Overtime And Travel Expenses

Claims for overtime and/or travel expenses to attend the funeral of an employee who died in-the-line-of-duty shall be pre-authorized in writing by the requesting employee’s hiring authority. The employee may then submit the CDC Form 1082, Request for Travel/Relocation Advance, and/or STD 682, Authorization for Extra Hours.

Family Liaison

The hiring authority shall designate a staff person to act as liaison to the family. This may be the CDC representative or another staff member who shall discuss with the family benefits, collection of state-issued property, and return of personal effects.

Personnel Office Responsibilities

Personnel staff are responsible for the following:

- Reviewing the employee's official personnel file and other employment records to determine final pay and benefits for which beneficiaries are eligible.
- Meet personally with family to discuss appropriate benefits and final pay.
- Notify the following of the employee’s death:
  - Assistant Deputy Director, OPM.
  - PERS.
  - SCO.
  - DPA, Savings Plus Program office (if applicable).
  - Appropriate employee union or associations, insurance companies or credit unions (if applicable).
- Process final pay and other appropriate disbursements or collections (e.g., outstanding accounts receivable, salary or travel advances, or garnishments); and release any warrants in accordance with the provisions of SAM §8477.25.
- Provide the family with a listing of the deceased’s payroll deductions and contacts for benefits, which may include the following:
  - Basic benefits.
  - Social security benefits.
  - Savings bonds.
  - Deferred compensation.
  - Tax-sheltered annuities.
  - Life insurance.
  - Health, dental and vision.
  - Special benefits (depending upon the employee’s retirement category and nature of death).
  - Retirement benefits for State Peace Officers/Firefighters, Safety, Industrial, or Miscellaneous members of the PERS including burial expenses.
  - Workers’ compensation benefits.
  - United States Department of Justice death benefits.

Additional responsibilities appear in the Personnel Transactions Reference Manual which is available in each personnel office.

31090.6 On-Duty Death

Notification of Family

Upon notification of an employee's death the hiring authority shall establish a team of staff to deal with the variety of associated tasks. This team may include the deceased employee's immediate supervisor, a personnel transaction representative and other members as determined by the hiring authority or his/her designee.

Whenever possible, a CDC management representative and/or the employee's supervisor shall, in-person, notify the family of the employee's death. If appropriate, a co-worker close to the deceased and a chaplain may also be present.

The CDC representative shall:

- Ask to enter the residence and inform the family in a plain and concise manner; express condolences; and provide pertinent information regarding the circumstances surrounding the death. Any questions by the family may be addressed at this time. If this notification is to be made at a family member's place of work, a private area should be arranged in advance by the CDC representative.
- Discuss with the family CDC's involvement with funeral arrangements. The family will determine the level of CDC's participation in the funeral. The CDC representative will offer the Department's assistance to the family in making funeral arrangements.
- If the deceased was a correctional peace officer, inform the family of funeral arrangement options for peace officers.
- Discuss available resources, services and benefits.
- Determine with the family if arrangements should be made for someone to remain with the family until relieved by another family member or friends.
- At the family's request, assist in arranging for child care with a provider who is acceptable to the family.
- If the family requests assistance to be isolated from the media and the public, staff may be assigned to screen telephone calls.
- As appropriate and necessary, arrange for police protection for the family.
- Arrange with the family an appropriate time to discuss all other pertinent matters.

Hospital Attendance

If the employee dies in a hospital and the family requests, the CDC representative shall transport or arrange for transportation of the family to the hospital and provide support. The CDC representative will coordinate with medical personnel to provide the family with information regarding the death. The hospital's Patient Services Coordinator will be asked to designate a private waiting area for the family. It is important for the family to be given as much information as possible regarding the death to prevent misinformation.

Notification of Director

The employee's death shall be reported to the Assistant Deputy Director, OPM, at (916) 324-0538. The following information shall be provided:

- Employee's name.
- Civil service classification.
- Work location.
- Total state and CDC service.
- Date of birth.
- Date of death.
- Cause of death.
- Death category (in-the-line-of-duty, on-duty; or off-duty).
- Next-of-kin.
- Relationship.
- Next-of-kin's address.

The Assistant Deputy Director, OPM, shall be responsible for ensuring that the Director is notified when practical.

Notification of Governor

The death of an active employee shall be reported to the Governor's Office by the Assistant Deputy Director, OPM.

In addition, for employee deaths occurring under special circumstances, the Director may advise the Governor's Office and YACA.

Letter of Condolence - Hiring Authority

The hiring authority shall send a letter of condolence to the family.

Letter of Condolence - Director

In addition to the letter of condolence from the hiring authority, the Assistant Deputy Director, OPM, shall prepare a letter of condolence to the family for the Director's signature.

Office of Environmental Health & Safety Management (OEHSM) Responsibilities

The OEHSM staff, or the field return-to-work coordinator, shall work with the OPM or the local personnel officer to ensure all pertinent information is provided to the family regarding workers' compensation benefits. This shall include:

- Coordinating the completion and submission of SCIF Form 3067, and SCIF Form 3301, to the appropriate SCIF office.
- Notifying the DIR, Division of Workers' Compensation, of the employee's death and completing DIR Form 510. The completed form shall be forwarded to DIR, Death Without Dependents, P.O. Box 422400, San Francisco, California 94142.

- Immediately notifying the nearest district office of the Division of Occupational Safety and Health Administration of the employee's death, but no later than 24 hours after the formal notification of death. Notification information shall include:
    - Time and date of accident.
    - Employer's name, address and telephone number.
    - Name and job title of person reporting the accident.
    - Address of the site of the accident or event.
    - Name and address of employee.
    - Nature of injury.
    - Location where injured or deceased employee was moved.
    - Identify and list other law enforcement agencies present at site of accident.
    - Description of accident and whether the accident scene has been preserved or altered.
- If necessary, at the direction of the hiring authority, the Employee Post Trauma Program shall be activated. Additionally, Critical Incident Stress Debriefing shall be coordinated through the EAP provider, Merit Behavioral Care of California, at the hiring authority's request.

Information regarding the benefits available from the EAP program shall be provided to the family.

Displaying the Flag

For institution employees who die while on duty, the warden shall determine if it is appropriate to have the facility flag flown at half-mast on the day of the funeral.

Draped Badges

Upon notification of the death of an employee and until immediately after the funeral, each hiring authority may authorize his/her peace officer staff to wear their badges draped pursuant to DOM §33020.

Funeral Arrangements

If requested by the family, CDC may provide assistance in making funeral arrangements.

Funeral Attendance

Department representation at the funeral services of any employee who dies on duty is desirable.

Staff may attend an employee's funeral on state time with authorization of the hiring authority. The number of employees permitted to attend the funeral shall be governed by CDC's needs.

When the funeral is beyond the immediate geographic area, the hiring authority may approve attendance on state time, using a state vehicle.

Funeral Uniform

When uniform staff who are not participating as the honor guard attend the funeral of a CDC, or other law enforcement agency, employee in an official capacity, the CDC Class "A" uniform shall be worn, including the draped departmental regulation badge. The DOM §33020 describes how the departmental regulation badge shall be draped and the Class "A" uniform.

Overtime And Travel Expenses

Claims for overtime and/or travel expenses to attend the funeral of an employee who died on duty shall be pre-authorized in writing by the requesting employee's hiring authority. The employee may then submit a CDC 1082 and/or a STD 682.

Family Liaison

The hiring authority shall designate a staff person to act as liaison to the family. This may be the CDC representative or another staff member who shall discuss with the family benefits, collection of state-issued property, and return of personal effects.

Personnel Office Responsibilities

Personnel staff are responsible for the following:

- Reviewing the employee's official personnel file and other employment records to determine final pay and benefits for which beneficiaries are eligible.
- Meet personally with family to discuss appropriate benefits and final pay.
- Notify the following of the employee's death:
    - Assistant Deputy Director, OPM.
    - PERS.
    - SCO.
    - DPA, Savings Plus Program office (if applicable).
    - Appropriate employee union or associations, insurance companies or credit unions (if applicable).
- Process final pay and other appropriate disbursements or collections (e.g., outstanding accounts receivable, salary or travel advances, or garnishments); and release any warrants in accordance with the provisions of SAM §8477.25.
- Provide the family with a listing of the deceased's payroll deductions and contacts for benefits, which may include the following:
    - Basic benefits.
    - Social security benefits.
    - Savings bonds.

- Deferred compensation.
- Tax-sheltered annuities.
- Life insurance.
- Health, dental and vision.
- Special benefits (depending upon the employee's retirement category and nature of death).
- Retirement benefits for State Peace Officers/Firefighters, Safety, Industrial, or Miscellaneous members of the PERS including burial expenses.
- Workers' compensation benefits.
- United States Department of Justice death benefits.

Additional responsibilities appear in the Personnel Transactions Reference Manual which is available in each personnel office.

31090.7 Off-Duty Death

The CDC may assist the family in obtaining appropriate state benefits and may offer assistance to family members in making funeral arrangements, if requested.

Notification of Family

Upon notification of an employee's death the hiring authority shall establish a team of staff to deal with the variety of associated tasks. This team may include the deceased employee's immediate supervisor, a personnel transaction representative and other members as determined by the hiring authority or his/her designee.

If CDC is the first to have confirmed knowledge of an employee's off-duty death, whenever possible, a CDC management representative and/or the employee's supervisor shall, in-person, notify the family of the employee's death. If appropriate, a co-worker close to the deceased and a chaplain may also be present. The CDC representative shall:

- Ask to enter the residence and inform the family in a plain and concise manner; express condolences; and provide pertinent information regarding the circumstances surrounding the death. Any questions by the family may be addressed at this time. If this notification is to be made at a family member's place of work, a private area should be arranged in advance by the CDC representative.
- Discuss with the family CDC's involvement with funeral arrangements. The family will determine the level of CDC's participation in the funeral. The CDC representative will offer the Department's assistance to the family in making funeral arrangements.
- If the deceased was a correctional peace officer, inform the family of funeral arrangement options for peace officers.
- Discuss available resources, services and benefits.
- Determine with the family if arrangements should be made for someone to remain with the family until relieved by another family member or friends.
- At the family's request, assist in arranging for child care with a provider who is acceptable to the family.
- If the family requests assistance to be isolated from the media and the public, staff may be assigned to screen telephone calls.
- As appropriate and necessary, arrange for police protection for the family.
- Arrange with the family an appropriate time to discuss all other pertinent matters.

Notification of Director

The employee's death shall be reported to the Assistant Deputy Director, OPM, at (916) 324-0538. The following information shall be provided:

- Employee's name.
- Civil service classification.
- Work location.
- Total state and CDC service.
- Date of birth.
- Date of death.
- Cause of death.
- Death category (in-the-line-of-duty; on-duty; or off-duty).
- Next-of-kin.
- Relationship.
- Next-of-kin's address.

The Assistant Deputy Director, OPM, shall be responsible for ensuring that the Director is notified when practical.

Notification of Governor

If an active employee's off-duty death occurs under special circumstances, the Director may advise the Governor's Office and the YACA.

Letter of Condolence - Hiring Authority

The hiring authority shall send a letter of condolence to the family.

Letter of Condolence - Director

In addition to the letter of condolence from the hiring authority, the Assistant Deputy Director, OPM, shall prepare a letter of condolence to the family for the Director's signature.

Funeral Arrangements

If requested by the family, CDC may provide assistance in making funeral arrangements.

Funeral Attendance

Department representation at the funeral services of any employee who dies off-duty is desirable.

Staff may attend an employee's funeral on state time with authorization of the hiring authority. The number of employees permitted to attend the funeral shall be governed by CDC's needs.

When the funeral is beyond the immediate geographic area, the hiring authority may approve attendance on state time, using a state vehicle.

Funeral Uniform

When uniform staff who are not participating as the honor guard attend the funeral of a CDC, or other law enforcement agency, employee in an official capacity, the CDC Class “A” uniform shall be worn, including the draped departmental regulation badge. The DOM §33020 describes how the departmental regulation badge shall be draped and the Class "A" uniform.

Overtime And Travel Expenses

Claims for overtime and/or travel expenses to attend the funeral of an employee who died off-duty are not authorized.

Family Liaison

The hiring authority shall designate a staff person to act as liaison to the family. This may be the CDC representative or another staff member who shall discuss with the family benefits, collection of state-issued property, and return of personal effects.

Personnel Office Responsibilities

Personnel staff are responsible for the following:

- Reviewing the employee's official personnel file and other employment records to determine final pay and benefits for which beneficiaries are eligible.
- Meet personally with family to discuss appropriate benefits and final pay.
- Notify the following of the employee’s death:
  - Assistant Deputy Director, OPM.
  - PERS.
  - SCO.
  - DPA, Savings Plus Program office (if applicable).
  - Appropriate employee union or associations, insurance companies or credit unions (if applicable).
- Process final pay and other appropriate disbursements or collections (e.g., outstanding accounts receivable, salary or travel advances, or garnishments); and release any warrants in accordance with the provisions of SAM §8477.25.
- Provide the family with a listing of the deceased’s payroll deductions and contacts for benefits, which may include the following:
  - Basic benefits.
  - Social security benefits.
  - Savings bonds.
  - Deferred compensation.
  - Tax-sheltered annuities.
  - Life insurance.
  - Health, dental and vision.
  - Special benefits (depending upon the employee’s retirement category and nature of death).
  - Retirement benefits for State Peace Officers/Firefighters, Safety, Industrial, or Miscellaneous members of the PERS including burial expenses.
  - Workers’ compensation benefits.
- United States Department of Justice death benefits.

Additional responsibilities appear in the Personnel Transactions Reference Manual which is available in each personnel office.

31090.8 Death While Traveling On Official State Business

If an employee dies while traveling on official state business, reimbursement may be claimed for actual and reasonable expenses incurred in returning the deceased to his/her place of burial or his/her assigned office/institution, whichever is less. Reimbursement shall be in accordance with the provisions of §599.636 (for represented employees) or 599.636.1 (for excluded employees) of the DPA regulations.

31090.9 Attendance At Funeral Of Retired Department Of Corrections Employee

Staff may attend a retired employee's funeral on state time with the prior authorization of the hiring authority. The number of employees permitted to attend the funeral shall be governed by CDC's needs. Claims for overtime and/or travel expenses are not authorized.

31090.10 Attendance At Funeral Of Outside Law Enforcement Or Public Official:

Staff may attend on state time, and with the use of a state vehicle, the funeral of a public official or law enforcement official from an outside agency with the advance authorization of the hiring authority. Prior approval of the hiring authority is also required for any claims of overtime and/or travel expenses.

31090.11 Attendance at Funeral Of a Co-Worker's Family Member

Staff who wishes to attend the funeral of a co-worker's relative may do so with the prior approval of their supervisor, on a case-by-case basis. Claims for overtime and/or any expenses are not authorized.

31090.12 When An Employee's Death Is Imminent

If any active employee has five or more years of state service or qualifies for retirement and his/her death is imminent, personnel staff shall contact PERS Benefits Services Division, Ombudsman, (916) 326-3216, immediately. The PERS staff will expedite the retirement processing and explain the best options to the family.

31090.13 Return of Personal Property

The CDC representative shall be responsible for ensuring the return of all personal property to the survivors. The deceased employee's desk, locker, bulletin boards, office space and other appropriate areas should be inspected for any personal items. The CDC representative shall discuss with the hiring authority the appropriate disposition of any material that may be embarrassing or painful to the family.

31090.14 Return of State-Issued Property

The CDC representative shall be responsible for the collection and inventory of the deceased employee's state-issued property. Permission shall be obtained from the family to remove state-issued property from the deceased's residence. If the deceased lived alone, the person identified on the Emergency Notification Form shall be contacted to obtain permission to remove state property from the deceased employee's residence.

If the family refuses to relinquish state property, the hiring authority shall determine appropriate recovery efforts.

31090.15 Long Term Family Support

The responsibility of CDC to the family does not end at the funeral. CDC staff shall remain sensitive to the needs of the family and provide necessary follow-up and long term support.

31090.16 Revisions

The Deputy Director, ASD, or designee, shall ensure that the content of this section is accurate and current.

31090.17 References

GC §§ 11030.1; 12479; 13959-13974.1; 19859.3; and 21490-21635.

LC, Article 4, §§ 4700-4702, Death Benefits.

Public Safety Officers Benefit Program Act of 1976, and as amended.

Law Enforcement Officers' Information Guide for Federal Benefits (under 5 USC 8101, et seq., as extended by 5 USC 8191, et seq.).

SAM §§ 0772, 2580.2, 8477.1-8477.26, 8477.3-8477.32

DPA, §§ 599.636, 599.636.1 and 599.506.

DOM §§ 33010 and 33020.

U.S. Department of Justice, 1996 Pamphlet 564/49109 (CA721 & CA722).

Personnel Action Manual Section 6.9, Personnel Action.

PERS Benefits Booklets: Benefits for State Industrial Members; Benefits for State Safety Members; and Benefits for State Peace Officers/Firefighters.

PERS Retirement System Booklet: Beneficiary Designations and Election and Survivor Benefits.

PERS Circular Letters regarding the death of an employee are available through PERS, Letters No. 400-533, dated: 06/20/93 and 400-021, dated: 07/26/93.

SPB, Personnel Transactions Manual, Sections 590-594, Death, provides information regarding lump sum payment.

DPA Compensation Plus booklet provides a summary of primary benefits for managerial, supervisory and confidential employees and provides some information on employee death.

ARTICLE 10 — CONFLICT OF INTEREST

Effective February 13, 1990

31100.1 Policy

Employees and appointed officials of the Department, PIA, PIB, and NAEA shall neither make nor participate in making governmental decisions which may affect their own economic interests.

31100.2 Purpose

This section specifies the requirements and categories for disclosure of economic interests and identifies those positions within the Department, PIA, PIB, and NAEA which are subject to the disclosure requirements.

31100.4 Responsibility

Incumbents of designated positions, based on the assigned category, shall complete and file with their local personnel office a Statement of Economic Interest, STD Form 730 .

The local personnel office shall forward these forms to the Filing Officer - the Deputy Director, ASD, Central Office.

The Filing Officer or designee shall:

- After retaining a copy, forward the original statements of the following persons to the Fair Political Practices Commission:
  - Director of Corrections.
  - Members of boards and commissions.
  - Members and Administrative Officer of NAEA.
  - PIB members.
- Retain the original statements of all other employees for public inspection.

31100.5 Submittal of Statement of Economic Interest

All incumbents of current designated positions shall file annual statements no later than April 1 each year for the preceding calendar year.

Incumbents of positions which become designated by an amendment of the conflict of Interest Code shall file initial statements within 30 days after the effective date of the amendment.

Persons who are appointed (from an open or promotional employment list or by transfer, reinstatement, demotion, or any other means) to designated positions shall file assuming office statements as follows:

- Within 30 days of the date of nomination or effective date of appointment if subject to State Senate confirmation; or
- Within 30 days of the effective date of appointment to any other designated position.

Leaving Office Statement

Each person who leaves a designated position shall file a leaving office statement within 30 days after leaving.

311000.6 Disqualification

Self- Disqualification

Persons in designated positions shall disqualify themselves from making, participating in, or influencing any decisions which foreseeably have material financial effect on any of the following:

- A business entity in which an investment of more than $1,000 is held or in which the person is a director, partner, officer, trustee, employee, supervisor, or manager.
- An interest of more than $1,000 in real property.
- A source of income of $250 or more in value received by or provided or promised to the person within 12 months prior to the decision.

Exception

No person in a designated position shall be prevented from making or participating in any decision if the participation is legally required for the decision to be made.

The fact that the vote of a person who is on a voting body is needed to break a tie does not make the participation legally required for purposes of this section.

31100.7 Manner of Disqualification

In the case of a person who is the head of an agency, this determination and disclosure shall be made in writing to the appointing authority.

When a person in a designated position determines that he or she should not make a governmental decision because of an economic interest, the determination not to act shall be accompanied by disclosure of the economic interest.

Head of Agency Board/Commission Members

If the person is a board or commission member, the determination and disclosure shall be entered into the official record at the meeting during which consideration of the decision takes place.

Other Persons

In the case of other persons, this determination and disclosure shall be made in writing to the person's supervisor.

- Upon receipt of the determination and disclosure, the supervisor shall immediately reassign the matter to another person.

- After reassignment of the matter, the supervisor shall forward the determination and disclosure with a notation of the reassignment to the local personnel office for forwarding to the Filing Officer.

31100.8 Revisions

The Deputy Director, ASD or designee shall ensure that the content of this section is accurate and current.

31100.9 References

CCR (2) § 18730.

GC § 81000 et. seq

CCR (15) (3) § 3416.

ARTICLE 11 — SMOKING – NONSMOKING

Revised December 9, 1994

31110.1 Policy

To provide a healthful, comfortable, and productive work environment for employees, the Governor of the State of California has prohibited cigarette, cigar, and pipe smoking in all State-owned, Leased, or occupied buildings. Smoking is also prohibited in all State passenger vehicles and any other mobile-enclosed equipment. Tobacco product advertising is not allowed inside any State-owned or occupied building unless it is contained in a program, leaflet, newspaper, magazine, or other written material lawfully sold, brought, or distributed within a State building. Posting of any tobacco product or smoking advertisement is prohibited (posters, signs, written, or visual material). Smoking is not allowed within 15 feet of a main entrance or exit to a building.

31110.2 Purpose

This section designates the Department's responsibilities in providing a smoke-free environment for all employees.

31110.3 Responsibility

All employees shall:

- Adhere to and enforce this policy.
- Attempt to resolve disagreements informally.
- Bring to the attention of the appropriate supervisor any conflicts which cannot be resolved informally.

All supervisors shall:

- Ensure that no smoking occurs in a State-owned, leased, or occupied building.
- Ensure that no smoking is allowed within 15 feet of a main entrance or exit of a building.
- Ensure that no smoking occures in any State-owned passenger vehicle. Smoking is also prohibited in all other State-owned mobile equipment including light and heavy trucks, cargo and passenger vans, busus, and any other mobile equipment with an enclosed drive/passenger compartment.

Hiring authorities shall establish local smoking policies which are consistent with the provisions of this section and the Governor's Executive Order W-42-93, and Government Code (GC) Sections 19994.30 through 19994.35.

31110.4 Definition

Smoke or smoking means inhaling, exhaling, burning, or carrying any lighted cigarette, cigar, pipe, or smoking paraphernalia used for consuming the smoke of tobacco or any other burning product.

31110.5 Smoke Breaks

Time taken away from an employee's work station shall not exceed the total time an employee is otherwise authorized to take for rest periods. Smoke breaks are in lieu of regular breaks or rest periods and shall be permitted at the discretion of the supervisor.

31110.6 Smoking Areas

Smoking areas shall be in prison yards or other outdoor areas designated for smoking by each facility head, including those designated for the purpose of religious ceremonies as specified.

State-owned housing serving as the primary residence for State employees.

31110.7 Nonsmoking Areas

Signs shall be posted in those prison yard areas within the security perimeters not designated for smoking, along with a citation of the authority requiring such prohibition.

No person shall smoke in any building, areas of any building, or group of buildings owned, leased, or utilized by the Department. This shall include, but is not limited to, facilities, community correctional centers, work furlough centers, restitution centers, and family visiting units.

31110.8 Assistance for Smokers

The Department urges smokers to contact the local chapter of the American Lung Association for more information about smoking cessation programs. These programs provide for a supportive environment in which employees can quit smoking through education.

The Department's Office of Environmental Health, and Safety Management shall periodically distribute helpful literature for those interested in such programs. Additional information can be obtained from the local and/or departmental Employee Assistance Program Coordinator, headquarters.

311108.1 Training

The Department may offer tobacco smoking control programs using existing employee training funds for presentation during normal working hours.

Upon initial employment, all hiring authorities shall inform employees about the smoking prohibition, the areas where smoking is permitted, and the availability of smoking control programs.

Enrollment in a smoking cessation/control program is voluntary.

31110.9 Violations

Resolution of any disagreement on behalf of an employee may be pursued through the Department's complaint process. Refer to the applicable bargaining unit contract or excluded employee complaint form for the process to file a complaint.

Disputes relating to this policy are subject to the provisions of Department of Personnel Administration (DPA) Rule 599.859 for nonrepresented employees and the various bargaining unit contracts for represented employees.

31110.10 Revisions

The Deputy Director, Administrative Services Division, or designee shall be responsible for ensuring that the contents of this section are kept current and accurate.

31110.11 References

GC §§ 1994.30 through 1994.35.

Governor's Executive Order W-42-93.

CCR (15)(3), §3436.

Management Memorandum 93-30.

DPA Rule 599.859.

Memoranda of Understanding

ARTICLE 12 — STAFF MEETINGS

Effective January 21, 1989

31120.1 Policy

Staff meetings shall be held to bring about better communication.

31120.2 Purpose

This section establishes format and distribution of staff meeting minutes.

31120.3 Schedule

Staff meetings shall be scheduled as follows:

- Major divisions As deemed necessary in an institution by division head.
- Other units As deemed necessary by supervisor.

31120.4 Minutes

Brief minutes of the meeting of divisions within institutions shall be prepared as soon as possible but no later than seven days from the meeting date.

31120.4.1 Format

The format shall be:

(NAME OF INSTITUTION)
Minutes of _____ Staff Meeting
(Date)
Present_____
Dr._____
(position titles unnecessary)
Absent _____
Chairperson _____
Time Commenced _____
Time Adjourned: _____
1 (Short title of item underlined)
Summarize discussion of item to include salient points; show disposition; as assignment is made, specify to whom: report policy decisions.
2. _____
3. _____
Use both sides of paper if minutes are more than one page in length.
_____
Approval of Chairperson
Signature of Reporter

31120.5 Distribution

Institution: to staff and bulletin boards as appropriate.

Central Office: see Section 12050.8 of this manual.

31120.6 Revisions

The Deputy Director, Institutions Division, shall ensure that the content of this section is accurate and current.

31120.7 References

ACA Standard 2-4014.

ARTICLE 13 — EMPLOYEE MISCONDUCT INVESTIGATIONS/INQUIRIES

Revised January 13, 1999

31140.1 Policy

Every allegation of employee misconduct shall be promptly, objectively, and thoroughly investigated, reported, and audited.

31140.2 Purpose

This section specifies staff responsibilities and guidelines for handling allegations of employee misconduct.

31140.3 Definitions

Category I

Misconduct, classified as Category I, is generally performance related employee misconduct.

Category II

Misconduct, classified as Category II, is serious employee misconduct that is outside the scope of normal employee supervision. Generally, Category II misconduct involves outside organizations and elements where the need for specialized investigative skills and resources exceeds the capability of institution or field office supervisory staff.

Criminal Investigation

A criminal investigation is conducted on Department' staff when there is reason to believe staff has committed a violation of criminal law. After a complete investigation and the elements related to the criminal conduct are established, the case shall be referred to prosecuting authorities for review and decision on prosecution.

Fact Finding Inquiry

A fact finding inquiry is the collection of information that supports or refutes alleged misconduct classified as Category I. Staff, assigned by the Hiring Authority, conducts the fact-finding inquiry to determine if employee misconduct, classified as Category I, is a violation of law, regulation, policy, or procedure.

Hiring Authority

The Hiring Authority is an individual authorized by The Director to hire, discipline, and dismiss staff.

Internal Affairs Investigation

An internal affairs investigation is the collection of evidence that supports or refutes alleged misconduct classified as Category II. The OIA' (OIA) agents conduct internal affairs investigations to determine if serious employee misconduct classified as Category II, is a violation of law or regulation.

31140.4 Responsibility for Employee Misconduct Investigations/Inquiries

The Director has overall responsibility to ensure full investigation of all alleged employee misconduct.

31140.4.1 Responsibility of OIA (OIA)

The OIA is responsible for completing those internal affairs investigations classified as Category II investigations and the tracking and auditing of all Category I inquiries. (See DOM 31140.6.1 and 31140.6.2 for descriptions of Category I and II misconduct.)

Assistant Director

The Assistant Director, OIA, under the general direction of the Director, shall:

- Oversee the departmental internal affairs program.
- Serve as the top management advisor on employee misconduct issues to the Director.
- Establish guidelines, priorities, training, and management systems to ensure an efficient and effective internal affairs operation.
- Serve as a member of the Director's Executive Staff.
- Participate in the development, implementation, and evaluation of departmental strategic and operational plans.
- Be available 24-hours a day, 7 days a week.

Regional Special Agent-In-Charge

The Regional Special Agent-In-Charge, under the direction of the Assistant Director, OIA, manages and directs a regional internal affairs office. The Regional Special Agent-In-Charge shall:

- Review every CDC Form 989, Internal Affairs Investigation Request, submitted within their assigned region.
- Accept or reject the request for a Category II investigation and may request additional information from the Hiring Authority before making a determination.
- Coordinate employee misconduct matters with the Hiring Authorities within their respective jurisdictions.
- Provide functional supervision of all staff assigned to a regional office.
- Direct and assist in the coordination of those investigations involving sensitive and/or complex issues.
- Develop and submit management advisory and statistical reports.
- Develop and interpret analytical data.
- Provide direct liaison with other law enforcement agencies and prosecution entities.
- Prepare and serve search warrants.
- Participate in arrests.

- Assist the Assistant Director, OIA, and CDC Executive Staff relative to investigations concerning employee misconduct.

Senior Special Agent

The Senior Special Agent, under the direction of the Regional Special Agent-In-Charge, is a working supervisor. The Senior Special Agent shall:

- Supervise the Special Agents and clerical support staff assigned to the regional office.
- Provide technical direction regarding investigations including subject's rights, evidence collection and retention, investigation preparation, and both criminal and administrative internal affairs processes.
- Monitor investigation progress, develop investigative plans, and evaluate Special Agent's performance.
- Conduct investigations as required.

Special Agent

The Special Agent, under supervision of the Senior Special Agent, is responsible for conducting internal affairs investigations into allegations of misconduct by departmental employees, regardless of the employee's position or rank. The Special Agent shall:

- Collect physical evidence.
- Interview witnesses.
- Conduct investigatory interviews.
- Prepare comprehensive reports of investigative findings and submit to supervisory staff.
- Coordinate employee criminal investigations with outside law enforcement agencies including judicial agencies.
- Provide surveillance, with supervisory authorization, relating to employee misconduct.
- Testify in both criminal and administrative hearings regarding employee misconduct matters as required.

Legal Counsel

The Legal Counsel is under the supervision of the ELU, LAD (LAD), for all substantive legal issues. The Regional Special Agent-In-Charge shall provide day to day supervision. Legal Counsel shall provide technical legal advice regarding:

- Initiation, development, and completion of internal affairs investigations.
- Development of the investigative plan.
- Representation issues.
- Public Safety Officers Procedural Bill of Rights.
- Information and evidence development.
- Confidentiality matters.
- Other issues regarding the investigative process.

Legal Counsel shall:

- Evaluate completed investigations for legal sufficiency.
- Identify case liabilities and departmental litigation exposure, including any pending litigation.
- Provide representation, in cooperation with the ELU, LAD in formal administrative/judicial hearings.

31140.4.2 Responsibility of Hiring Authority

The Hiring Authority shall evaluate all internal affairs investigation requests, initiated within their jurisdiction, and determines the appropriate investigative category. The Hiring Authority shall:

- Designate a specific employee(s) to coordinate, track, and assign supervisory staff to conduct fact-finding inquiries for all Category I misconduct.
- Refer all Category II Investigations to OIA and designate an employee(s) to act as coordinator(s) and contact person(s) with the regional OIA.
- Give full cooperation to, and share all information pertaining to any allegation of employee misconduct with the OIA.
- Authorize, assign, and review all Category I investigations (see DOM 31140.5 and 31140.6.1 for further information).
- Ensure that every complaint or allegation of employee misconduct receives prompt and thorough attention including contact with the complainant notifying them of the finding, i.e., sustained, not sustained. This notification shall include the definition of the finding as discussed in DOM 31 140.14. Since existing law prohibits disclosure of any specific personnel action taken, the complainant may only be advised that "appropriate administrative action has been taken." Pursuant to PC 832.7 and 832.8 and EC 1043 through 1045(e), at no time should specifics relating to any personnel action be discussed with a complainant in the matter.
- Ensure the employee who is the subject of an investigation receives a written disposition of the investigation at the conclusion of the investigation.

31140.4.3 Responsibility of Managers/Supervisors

Managers and supervisory staff shall report all incidents of misconduct that are personally observed or reported to them. Supervisory staff shall gather initial information and evidence, submitting it to the Hiring Authority by a memorandum.

At the direction of the Hiring Authority, each manager/supervisor assigned to conduct an inquiry regarding employee misconduct shall:

- Ensure that the Hiring Authority assigning the inquiry is fully apprised concerning the progress and findings of the inquiry
- Immediately notify the Hiring Authority when information is developed which tends to change the character or complexion of the inquiry.
- Immediately document and report to the Hiring Authority if any employee:
    - Does not fully cooperate in the inquiry of any allegation of misconduct or the appearance of misconduct.

- Causes duress.
- Exerts undue influence.
- Interferes with the inquiry.

- Submit documented findings by CDC Form 989A, Internal Affairs Investigation Report and CDC Form 989B, Continuation Sheet (Internal Affairs) to the Hiring Authority.
- The Parole & Community Services Division shall designate the RPA or Community Correctional Center Administrator as the responsible person for reporting all internal affairs investigations occurring in their respective regions. The RPA or Community Correctional Center Administrator shall assign managers, unit supervisors or confidential employees to conduct all Category I inquiries.

31140.5 Qualifications of Local Investigators

The Hiring Authority shall ensure that all staff assigned to conduct Category I inquiries are properly trained and qualified to conduct inquiries. The investigators shall be thoroughly familiar with existing mandates relative to peace officers' rights, the SKELLY Hearing decision, and other applicable rules, regulations, and laws.

31140.5.1 Authority of OIA Investigators During an Investigation

Special Agents, OIA, may be assigned to conduct investigations into allegations of misconduct by any employee of CDC regardless of the employee's position or rank.

31140.5.2 Required Training for Staff Assigned to Conduct Employee Misconduct Investigations/ Inquiries

The Assistant Director, OIA, shall establish training programs for staff assigned to conduct employee misconduct investigations/inquiries. Appropriate notice regarding the available dates for such training shall be given to all units within CDC. Prior to conducting any employee misconduct investigation/inquiry, staff are required to complete the CDC Internal Affairs Investigation Course.

Investigator training shall include the following areas:

- Role of internal affairs.
- Policy and ethics.
- Public Safety Officers Procedural Bill of Rights.
- SPB Rule 61 (SKELLY).
- Complaint process, including citizens' complaints.
- Internal affairs policies and procedures.
- Internal affairs investigation processes.
- Legal constraints.
- Courtroom and administrative hearing procedures.
- Interrogation/interview techniques.
- Investigative security.
- Information practices constraints.
- Public record constraints.
- Media practices.
- Miranda requirements.
- Rules of evidence.
- Investigative techniques and report writing.
- Labor relations considerations.
- Employee representation.
- Public relations practices.
- Other training required in the performance of assigned duties.

31140.6 Employee Misconduct Categories

Employee misconduct is classified as one of two Categories. The Category assigned to an investigation determines the following:

- Assignment of an investigator.
- Dissemination of findings.

The Hiring Authority shall assign a Category to each incident of employee misconduct. In those instances where the incident contains elements of both categories, the Hiring Authority shall discuss the case with the Regional Special Agent-In-Charge for the region in which the institution/office is located, to determine the appropriate course of action. If an agreement cannot be reached on the course of action, the case shall be referred to the Assistant Director, OIA, and the Deputy Director, Assistant Director, or designated equivalent executive staff of the affected division or office for resolution.

The Hiring Authority in conjunction with the Regional Special Agent-In-Charge has the authority, based upon subsequent information received or developed during any investigation, to raise or lower the assigned Category.

The Hiring Authority in conjunction with the Regional Special Agent-In-Charge may upgrade Category I inquiries to Category II investigations based on such factors as:

- Available personnel.

- Complexity.
- Sensitivity.
- Confidentiality.

31140.6.1 Category I Inquiries

Category I inquiries are those which may reasonably be performed by regular facility, field, or other work site staff assigned by the Hiring Authority responsible for the employee about whom the allegation is made.

The following are generally Category I inquiries. However, dependent upon the seriousness of the misconduct, as determined by the Hiring Authority, these violations may be addressed as Category II investigations.

Note: Incidents requiring interviews of non-departmental personnel shall normally be addressed as Category II.

- Neglect of duty.
- Abuse of Sick Leave/Failure to report for duty.
- Punctuality/Tardiness.
- The use of alcohol or drugs at the workplace.
- Disobedience/Insubordination.
- Lack of alertness on the job.
- Undue familiarity with an inmate, within the institution, or with a parolee, or an inmate's or parolee's family or friends.
- Conduct unbecoming an employee of CDC.
- Security violations of a less serious nature.
- Weapons violations within the workplace.
- Misuse of State property.
- Filing a false report in the course of duty.
- Driving under the influence of alcohol.
- Other cases as determined by the Hiring Authority and Regional Special Agent-In-Charge.

31140.6.2 Category II Internal Affairs Investigations

Category II misconduct is serious employee misconduct that is outside the scope of normal employee supervision and considered more serious or of wider scope than a Category I inquiry. All Category II investigations shall be conducted by investigators of the OIA.

Investigations are generally classified as Category II when the allegations involve the following:

- Felonious conduct.
- Misdemeanor law violations.
- Multi-jurisdictional interest.
- Wide media interest.
- Departmental employees with non-employees.
- Multiple employees.
- High-ranking employees.
- More than one department or agency.
- Serious improper employee association with an inmate, parolee, or an inmate's or parolee's family or friends.
- Conduct involving moral turpitude or which brings discredit to CDC.
- Spousal abuse, including violation of restraining orders, harassing conduct, etc.
- Misuse of State property including theft of State property.
- Misuse of peace officer authority or privilege.
- Excessive force on an inmate involving injury or unusual circumstances.
- Dishonesty in reporting incidents involving misconduct, when such dishonesty undermines the integrity of departmental operations or discredits CDC.
- Employee association with prison gangs, gang members, or families of gang members.
- Narcotic/contraband smuggling.

The investigation requires the following:

- Specialized equipment or expertise.
- Off reservation surveillance.
- Preparation or service of search warrants.

31140.7 Investigation/Inquiry Process

All investigations/inquiries shall be conducted in an ethical and impartial fashion with the primary objective of providing facts surrounding the alleged misconduct. Ethical discovery of either substantiating or refuting evidence is critical to the integrity of the OIA and CDC.

Investigators, administrators, witnesses, and other involved parties shall not discuss any aspect of any employee misconduct investigation/inquiry with any persons without the approval of the Hiring Authority and/or the unit assigned case responsibility, with the exception of the subject employee's representative or legal counsel. All reports, documents, evidence, and other materials or information relative to any internal affairs investigation shall be processed and stored in a manner precluding unauthorized access or disclosure (Refer to PC 832.7 and 832.8, and EC 1043 and 1046).

All OIA investigations shall be afforded the highest degree of confidentiality. The Special Agent conducting the investigation is required to provide a meaningful liaison with the Hiring Authority unless specifically directed to follow another investigative strategy.

31140.7.1 Procedures for Filing an Allegation of Employee Misconduct

Every employee of CDC with knowledge of employee misconduct shall report any such act and cooperate fully in the investigative process. Failure to report or refusal to cooperate shall be grounds for adverse personnel action.

Every employee who receives a complaint or information from any source regarding misconduct on the part of a CDC employee, which if substantiated could lead to adverse personnel action against the violator, shall report that complaint or information to the proper authority.

Referral of complaints and/or information regarding employee misconduct shall be accomplished using the following guidelines:

- Misconduct or useful information related to misconduct of a minor nature, shall be reported to immediate supervisor.
- Misconduct or useful information related to misconduct of a sensitive or serious nature, shall be reported to the Regional OIA, Investigative Lieutenant, Chief Deputy Warden, Warden, Deputy RPA, RPA, or Hiring Authority.

In those unusually sensitive situations where, in the opinion of the reporting employee, an investigation may otherwise be compromised or jeopardized, the employee may make:

- A verbal report to any appropriate supervisor or administrator.
- Direct contact with the OIA to report the allegation.

Although the initial reporting of an allegation may be done verbally, all such reports shall be reduced to writing. The Hiring Authority shall designate who shall prepare the written report of the allegation and the format of the report. If allegations of employee misconduct are received and the identity of the individual making the allegations is unknown, the staff who initially received the information shall prepare a written report.

31140.7.2 Citizen's Complaint Against Department Employees

A citizen's complaint is an allegation by a non-inmate or non-employee of misconduct by a departmental employee. A citizen's complaint may be initiated by completing and submitting a CDC Form 2142, Citizen's Complaint Against Employee of the Department, to one of the following:

- Any departmental hiring authority.
- Any departmental supervisor or manager.
- Any office of CDC's OIA.

If the complaint is regarding a sexual harassment or discrimination based on race, gender, national origin, religion, sexual orientation, or disability, it may be referred to CDC's EEO Office for investigation and appropriate disposition. If other than the EEO conducts the investigation, the EEO office shall receive notification of the complaint and a copy of the final investigative report including the findings.

Dependent upon the seriousness of the allegation and pursuant to DOM 31140.6.1 and 31140.6.2, the complaint shall be investigated by a departmental hiring authority or the OIA. The investigation/inquiry shall be subject to the requirements outlined in DOM 31140.

31140.7.3 Emergency Reporting Procedures for Internal Affairs Investigations

Any allegation or complaint of misconduct which, if not given immediate attention, would result in the loss of life, serious bodily injury, a serious breach of facility security, further aggravation of a potentially dangerous situation, or seriously compromise or jeopardize an investigation of any such allegation, shall immediately be reported to the Hiring Authority and regional OIA by telephone. The reporting of an emergency allegation or complaint shall be followed by a written report of the emergency as soon as possible. This report shall be prepared, transmitted, and received in OIA no later than 24 hours after the receipt of the allegation, complaint, or other information creating the reported emergency, or on the first regular business day following a weekend or holiday.

If during an emergency the Hiring Authority cannot be contacted immediately by telephone, such contact shall be accomplished at the earliest reasonable opportunity.

If the OIA regional office cannot be contacted, the emergency allegation or complaint shall be reported to the Administrative Senior Special Agent or Assistant Director, OIA Headquarters. Contact shall be made at the earliest reasonable opportunity.

31140.7.4 Category I Process

Incidents of alleged misconduct require appropriate managerial/supervisory staff to gather pertinent information and evidence supporting an allegation of misconduct. The gathered information and evidence shall be compiled and submitted to the Hiring Authority by memorandum. It is imperative field staff submit comprehensive reports that include all pertinent information, evidence, and witness statements and/or reports. When cases require a consultation from a licensed health care clinician (e.g., physician, nurse, pharmacist) to assist in the identification and analysis of evidence, the Hiring Authority shall contact the Assistant Deputy Director, Health Care Operations, HCSD, who will arrange appropriate support. The clinician consultant will provide whatever support is required from the lead investigator within the legal constraints of their scope of licensure.

When cases submitted to the Hiring Authority are classified as Category I, the Hiring Authority shall complete a CDC Form 989 and submit it to the regional OIA for tracking and audit purposes. Within 3 days of initiation of the inquiry, the CDC Form 989 (photograph not required), the only document initially required, shall be sent to OIA. The Hiring Authority will then authorize the completion of an adverse action, corrective action, or further fact-finding inquiry.

Category I violations may require further information in the review and validation of a supervisor's request for formal adverse action. This could involve conducting tape-recorded interviews of the witnesses and/or the subject. The institutions and field offices shall satisfy this fact finding inquiry need through the second line supervisors/managers.

Any inquiries regarding employee misconduct, which may result in formal employee adverse action, require compliance with all current employee rights. During Category I inquiries, adherence to due process requirements is mandated.

31140.7.5 Category II Process

When the employee misconduct is determined to be serious and classified as Category II, the Hiring Authority shall request an investigation by the OIA. The Hiring Authority shall review the submitted information, possibly obtaining analysis from subject matter experts such as the ERO, Regional Special Agent-In-Charge, LAD, Regional Administrators, or other staff in making this determination. When cases require a consultation from a licensed health care clinician (e.g., physician, nurse, pharmacist) to assist in the identification and analysis of evidence, the Hiring Authority shall contact the Assistant Deputy Director, Health Care Operations, HCSD, who will arrange appropriate support. The clinician consultant will provide whatever support is required from the lead investigator within the legal constraints of their scope of licensure.

Some incidents of misconduct may require further investigation to fully determine the seriousness of the alleged misconduct. In these cases the Hiring Authority and the Regional Special Agent-In-Charge shall evaluate the matter to determine the appropriate course of action. Based on any number of intangible factors, preliminary inquiries could be conducted by the requesting location's supervisory employees or by an assigned OIA Special Agent. In either case the primary focus shall be to determine the extent of the misconduct and the necessity to conduct a Category II investigation.

Case Referrals

The Hiring Authority shall submit the completed package to the Regional Special Agent-In-Charge, OIA. The complete package shall include at a minimum:

- CDC Form 989 that must include the subject's:
  - Full name.
  - Title.
  - Social Security Number.
  - Date of birth.
  - CDC hire date.
  - Address (home and work).
  - Telephone number (home and work).
- Memorandum detailing the request for OIA investigation.
- All written reports.
- Physical evidence (as determined by the Hiring Authority and OIA).
- Witness Statements.
- Other applicable information.

Note: All original documents and evidence shall be maintained by the requesting institution/office unless specifically agreed to by the Regional Special Agent-In-Charge and the Hiring Authority.

The Hiring Authority shall prepare a CDC Form 989 noting any special information such as the employee being placed on administrative time off or given a firearms restriction. Transmission of the CDC Form 989 with supporting documentation shall be forwarded to the regional office by special mail processing (express/receipts) or personal delivery. The transmittal envelope shall be sealed and clearly marked "CONFIDENTIAL" with appropriate return address information.

The Regional Special Agent-In-Charge shall review the CDC Form 989 and supporting documents to determine if the allegation warrants an internal affairs investigation as outlined in the established criteria and/or agreed to by appropriate executive staff.

When a difference of opinion occurs between the Regional Special Agent-In-Charge and the Hiring Authority, every effort shall be made to resolve the matter at the lowest possible level. In those instances when agreement cannot be reached, the matter shall be referred to the Assistant Director, OIA, and the Deputy Director, Assistant Director, or designated equivalent executive staff of the affected division or office for resolution.

Case Acceptance

Upon determination that a case meets the established criteria for Category II investigation, the Regional Special Agent-In-Charge shall accept responsibility for the case and assign the case a log number according to the established logging system. The case shall be assigned to a Senior Special Agent who shall determine first line responsibility of the investigation.

The Regional Special Agent-In-Charge shall provide written acceptance of the case by memorandum to the Hiring Authority with copies to the responsible Regional Administrator or Deputy/Assistant Director, for those areas not having Regional Administrators; the Assistant Director, OIA; the regional OIA office, and case file. The memorandum shall include the name of the Senior Special Agent assigned case responsibility, the Special Agent assigned to investigate the matter, an anticipated completion date, and the regional OIA investigative log number. This acceptance memorandum shall remain a permanent exhibit in the investigator's case file.

Case Rejection

Should the Regional Special Agent-In-Charge reject a matter for investigation, a rejection memorandum shall be completed by the Regional Special Agent-In-Charge and forwarded to the Hiring Authority within 10 calendar days of receipt of the matter. The rejection memorandum shall include a clear detailed explanation for rejection. A copy of the rejection memorandum shall be forwarded to the responsible Regional Administrator or Deputy/Assistant Director for those areas not having Regional Administrators, and the Assistant Director, OIA, with a copy maintained by the Regional Special Agent-In-Charge. In addition to responding in writing, the Regional Special Agent-In-Charge shall contact the Hiring Authority and discuss the decision for the rejection. The Hiring Authority shall process the case as Category I misconduct or appeal the decision, within 5 days of receipt of the rejection, by referring the matter to the Assistant Director, OIA, and the Deputy Director, Assistant Director, or designated equivalent executive staff of the affected division or office for resolution.

Investigative Plan

The Senior Special Agent and assigned Special Agent shall review the case factors and develop an investigative plan for all Category II investigations. The investigative plan shall include, at a minimum:

- Determination of pertinent witnesses.
- Evaluation of physical evidence including site observation (photo/video/diagram).

- Review of collateral documents such as Personnel Files, Supervisory Files, ERO files, etc.
- Development of timeframes including an anticipated completion date.

All information in the investigative plan shall be held strictly confidential; however, communication of anticipated timeframes is encouraged with the Hiring Authority.

31140.7.6 Tracking Employee Misconduct

Each Hiring Authority is required to maintain two separate tracking logs; one for Category I misconduct that is addressed internally and the other that corresponds with the regional OIA for Category II incidents.

If several individuals are involved in one incident, separate log numbers shall be assigned to each individual. This will effectively separate the parties and their respective degrees of involvement/culpability as determined by the Hiring Authority. To cross-reference related cases, their log number should be noted in the miscellaneous section of the tracking log. Once an incident has been assigned a log number, all documents, evidence, and reports shall be marked and identified with this log number.

Category I

Category I incidents shall be assigned an institution, field office, or other work site specific tracking log number. Log numbers shall be assigned using a standard logging system throughout CDC. The Category I log numbers use the following format:

- I-CMF-001-97
- I-CMF-002-97
- I-PR4-00 1-97
- I-CCI-001-97
    - The first identifier "I" indicates the incident is a Category I.
    - The second identifier "CMF" indicates the institution, field office, or other work site by the official acronym.
    - The third identifier "001" indicates the sequential number. The sequence continues throughout the calendar year.
    - The fourth identifier indicates the calendar year in which the misconduct was initiated for action.

To ensure departmentwide standardization and compliance with departmental audit tools, the CDC Form 2140, Category I Log, or CDC Form 2141, Category II Log, shall be used by all areas for tracking cases.

By the 5th business day of each month the Hiring Authority shall forward a copy of their previous months Category I log to the regional OIA office. The Category I and Category II logs shall be used to analyze possible trends related to standardization, QC, compliance review audits, and training needs.

Category II

The Regional Special Agent-In-Charge, OIA, shall assign all Category II incidents a log number. The Category II log numbers use the same formatting as the Category I log numbers with the exception of the first digit. The first identifier indicates which OIA office is responsible for the investigation. The institution/office will track Category II incidents using the OIA log number only.

31140.8 Time Frames for Investigations/ Inquiries

The CDC shall normally conclude employee misconduct issues within one year from the date of CDC's discovery by a person authorized to initiate an investigation/inquiry of the allegation of misconduct, including notification of the subject employee, in writing, of the proposed disciplinary action or disposition as a result of the investigation/inquiry. If an employee misconduct matter is not concluded within this one-year time frame, CDC may be precluded from taking adverse action unless the matter is subject to abnormal and demonstrative circumstances. These circumstances include:

- If the act, omission, or other allegation of misconduct is also the subject of a criminal investigation or criminal prosecution, the one-year period shall be placed on hold for the time during which the criminal investigation or criminal prosecution is pending.
- If the employee waives the one-year time period in writing, the time period shall be placed on hold for the period of time specified in the written waiver.
- If the investigation is a multijurisdictional investigation that requires a reasonable extension for coordination of the involved agencies.
- If the investigation involves more than one employee and requires a reasonable extension.
- If the investigation involves an employee who is incapacitated or otherwise unavailable.
- If the investigation involves a matter in civil litigation where the employee is named as a party defendant, the one-year time period shall be placed on hold while the civil action is pending.
- If the investigation involves a matter in criminal litigation where the complainant is a criminal defendant, the one-year time period shall be placed on hold during the period of that defendant's criminal investigation and prosecution.
- If the investigation involves an allegation of workers' compensation fraud on the part of the employee.

Investigations/inquiries shall be completed within 60 days of the assignment of a Special Agent or staff to conduct the investigation/inquiry. A 30-Day extension may be requested from the Hiring Authority for Category I or Regional Special Agent-In-Charge, OIA for Category II. Headquarters OIA shall be notified on any extensions granted on Category II investigations. These investigation/inquiry timeframes are subject to a six-month maximum limitation.

The OIA shall notify the Hiring Authority, with a copy sent to the Regional Administrator or Deputy/Assistant Director for those areas not having a Regional Administrator, at the 120-day level on all investigations/inquiries not yet completed. For those investigations/inquiries not completed by the 150-day level, the Director's office shall be notified.

If because of abnormal and demonstrative circumstances, a Category II investigation is expected to exceed the 6 month time limit, the Regional Special Agent-In-Charge shall forward a letter to the Hiring Authority and the subject of the investigation detailing the reasons for and the justification of the delay.

If because of abnormal and demonstrative circumstances, a Category I inquiry is expected to exceed the 6 month time limit, the Hiring Authority shall forward a letter to the Regional Special Agent-In-Charge and the subject of the investigation detailing the reasons for and the justification of the delay.

31140.9 Procedures for Conducting an Investigation/Inquiry

An investigation/inquiry is a systematic gathering of all facts and evidence concerning an allegation of misconduct. All allegations, facts, evidence, and findings shall be verified and documented. The Special Agent/supervisory staff shall be alerted to the discovery and documentation of acts of misconduct not already alleged.

While other steps may be required, each investigation/inquiry shall include the following minimum steps:

- Identify each allegation separately.
- Identify and include all new allegations that surface during the investigation/inquiry.
- Obtain and/or review all related background information and documents, such as:
    - Arrest reports.
    - Incident reports.
    - Personnel files.
    - Expense claims.
    - Releases for medical or personal information.
    - Receipts.
    - Vouchers.
    - Citations.
    - Laws.
    - Regulations.
    - Operating procedures or instructions.

Note: A CDC Form 837A and B, Crime/Incident Report Part A-Cover Sheet and Part B-Involved Parties, shall not be used to document an act, which precipitates a request for an adverse personnel action.

- Interview all witnesses connected with the allegation.
- Obtain and preserve all physical evidence, such as:
    - Photographs.
    - Recordings.
    - Documents.
    - Charts.
    - Graphs.
    - Drawings.
    - Weapons.
    - Ammunition.
    - Chemical test results.

31140.9.1 Rights of an Employee During an Investigation/Inquiry

Nothing in this section shall prevent any employee from exercising any rights legally available to the employee. Chapter 9.7 of the GC, commencing with Section 3300, sets forth the Public Safety Officer's Procedural Bill of Rights Act. Departmental policy provides that the provisions of that Act apply to all other employees as well. Additionally, investigations/inquiries are subject to any applicable provision of affected union contracts or Memorandums of Understanding.

31140.9.2 Preparation for Interview/ Interrogation During Investigation/Inquiry

Where reasonably possible, before an interview/interrogation, the interviewer/interrogator shall prepare a summary or outline of the areas to be covered during the interview/interrogation. This need not reflect actual questions to be asked; although it may be that specific, but it should list or summarize at least the major areas to be covered. However, the interviewer/interrogator shall pursue new issues arising during an interview/interrogation.

31140.9.3 Interview of Witness

An employee, not the subject of the investigation/inquiry, is not entitled to representation or prior notification of an intended interview. The employee shall be advised that they are believed to be a witness or have information relative to an inquiry/investigation being conducted. The witness should be directly advised that they are not the subject of the investigation and disciplinary action is not being contemplated against them. Witnesses, who insist on representation after being explained their involvement as a potential witness only, shall be permitted to have representation present only if they reasonably believe adverse action may be taken against them in this matter. The interviewer shall advise the witness, on the tape recording, that they are being interviewed as a witness.

If during a witness interview, facts are discovered that indicate the witness may have violated departmental regulations or criminal law, immediately discontinue the interview, even if the facts/admissions are not related to the incident being investigated. Reschedule the interview applying all employee procedural safeguards related to subject of investigation/inquiry.

Departmental employees who refuse to cooperate with an inquiry/investigation may be subject to appropriate administrative action.

31140.9.4 Interrogation of Subject of Investigation/Inquiry

All CDC employees under investigation and subject to interrogation by CDC investigators shall be informed before such interrogation of the rank, name, and command of the officer in charge of the interrogation, the interrogating officer and all other persons to be present during the interrogation. This requirement may be completed in writing and include the scope of investigation. The scope of the investigation shall be in sufficient detail for the employee to understand the issues being investigated. This includes the dates or approximate periods of the alleged misconduct, location where the misconduct occurred, and other identifying factors that shall allow the employee to respond to the allegations.

If criminal charges are not likely, the interrogator shall read the advisement of rights portion of the CDC Form 989-C, Advisement of Rights--Administrative Inquiry to the employee and complete the form before any interrogation of the employee. When it is deemed that the employee being interrogated may be charged with a criminal offense, the interrogator shall read the advisement of rights portion of the CDC Form 989-D, Advisement of Rights-Miranda/Lybarger Warning, to the employee and complete the form before any interrogation of the employee.

31140.9.5 Recording Interviews/ Interrogations During an Investigation/Inquiry

When interviewing/interrogating an employee concerning matters that could lead to an adverse personnel action and/or criminal prosecution, the complete interview/interrogation shall be recorded, when reasonably possible. The employee being interviewed/interrogated shall have the right to make an independent recording of all aspects of each interview/interrogation.

The employee shall have access to the recording made by CDC if any further proceedings are contemplated or before any subsequent interview/interrogation. However, if a criminal investigation is initiated and the subject of the interview/interrogation does not invoke their Miranda Rights, access to any recording is prohibited unless included as part of a discovery.

All recordings shall be retained with the original investigative/inquiry report. Recordings are part of the investigative/inquiry report and are confidential under the Information Practices section of this manual (see DOM 13030).

Any recording of an interview/interrogation shall be:

- Made openly with the full knowledge of the employee being interrogated.
- Completely documented as part of the final report.
- Retained for later transcription, if needed.

31140.10 Procedures for Handling Criminal Misconduct Discovered During an Investigation/Inquiry

If an investigation/inquiry of alleged employee misconduct reveals a possible violation of criminal law, the investigator shall present the facts of the case to the Hiring Authority/Regional Special Agent-In-Charge having jurisdiction over the investigation/inquiry.

If the criminal violation is under the jurisdiction of CDC, a criminal investigation by OIA shall be conducted and the case presented to the local prosecuting authority for possible prosecution.

If the criminal violation is under the jurisdiction of another law enforcement agency, all reports, evidence, and other related material shall be presented to that agency for possible further investigation and/or prosecution. The OIA Regional Special Agent shall act as liaison and assist the outside agency as needed.

CDC employees shall not interfere with any investigation/inquiry, whether it is being conducted by investigators/staff of CDC or any other agency.

Regardless of the presence or absence of criminal prosecution, an adverse personnel action shall not be delayed unless it clearly would jeopardize the criminal prosecution. When criminal prosecution is possible, the designated Special Agent shall consult with the prosecuting authorities before interrogating the involved employee.

If in criminal cases the prosecuting authority declines to prosecute, this fact and the reason for the decision not to prosecute shall be documented for CDC's records.

31140.11 Confidentiality of Investigative Records

All investigations/inquiries shall be afforded the highest degree of confidentiality. Investigators, administrators, witnesses and others involved in an investigation/inquiry shall not discuss any aspect of any investigation/inquiry with any person without the approval of the Hiring Authority and/or the unit assigned case responsibility, with the exception of the subject employee's representative or legal counsel.

All reports, documents, evidence, other material or information relative to any investigation/inquiry shall be processed and stored in a manner precluding unauthorized access, disclosure or loss (Refer to PC 832.7 and 832.8, and EC 1043 and 1046). Under provision of DOM 13040, Public Records, internal affairs investigation reports may be exempt from disclosure.

31140.12 Application of IPA

All departmental employees shall comply with the provisions of DOM 13030, Information Practices, regarding the collection, storage, use, or disclosure of any information, record, or file in the possession of CDC containing personal information about an individual.

31140.13 Correspondence Relating to Any Internal Affairs Investigation

All correspondence related to any internal affairs investigation shall be clearly marked "CONFIDENTIAL." Correspondence includes, but is not limited to, reports, evidence, recordings, photographs, documents, or investigative material concerning any internal affairs investigation. When sending correspondence through the USPS, departmental mail, United Parcel Service, or other courier service, such material shall be sealed in a manner designed to prevent or reduce unauthorized access.

31140.14 Distribution of Investigations/ Inquiries

Upon completion of each Category I inquiry, the completed CDC Form 989A and CDC Form 989B shall be forwarded to the Hiring Authority having administrative jurisdiction over the employee about whom the inquiry was conducted. The Hiring Authority shall ensure a copy of the inquiry report is sent to the appropriate regional OIA.

Upon completion of each Category II internal affairs investigation, the Special Agent shall forward the completed investigation, and all supporting documents including investigative notes and case file documents, to the Regional Special Agent-In-Charge by the Senior Special Agent and Legal Counsel. The completed investigation shall include all relevant information supporting or refuting the allegations. The investigation shall contain the findings of fact.

Upon approval of the completed investigation, the Regional Special Agent-In-Charge shall forward a complete copy, including all original exhibits, investigative notes, and case file documents to the Hiring Authority who requested the investigation. The Regional Special Agent-In-Charge shall forward a letter to the subject of the investigation advising the investigation has been completed and the matter referred to the Hiring Authority. The Hiring Authority shall review the investigation package, and if the allegations are supported, request adverse action.

Additionally, for both Category I & II, a memorandum shall be sent at the time the action is finalized (i.e., after the SKELLY Hearing or the decision to dismiss) to the regional OIA indicating the action taken. A copy of the SKELLY Hearing decisions resulting in modification or withdrawal of an Adverse Personnel Action shall be sent to the regional OIA. If a decision is made anytime after the SKELLY Hearing to change the action taken, OIA shall be notified of the new action and the factors considered in the decision. A copy of the final disposition, if appealed, (i.e., after SPB Hearing) including any adverse action, shall be forwarded to OIA.

A copy of the investigation, without exhibits, shall also be forwarded to the Assistant Director, OIA. A complete copy of the investigation and case file shall be maintained by the Regional Special Agent-In-Charge.

Findings

The findings of each allegation shall be determined based upon whether the investigation/inquiry supports or refutes the allegation(s). The findings and their explanations are as follows:

- NO FINDING. The complaint failed to disclose promised information to further the investigation; the investigation revealed that another agency was involved and the complainant has been referred to that agency; the complainant wishes to withdraw the complaint; complainant refuses to cooperate with the investigation; or the complainant is no longer available for clarification of facts/issues.
- NOT SUSTAINED. Investigation failed to disclose a preponderance of evidence to prove or disprove the allegation made in the complaint.
- UNFOUNDED. The investigation conclusively proved that the act(s) alleged did not occur, or the act(s) may have, or in fact, occurred but the individual employee(s) named in the complaint(s) was not involved.
- EXONERATED. The facts, which provided the basis for the complaint or allegation, did in fact occur; however, investigation revealed that the actions were justified, lawful, and proper.
- SUSTAINED. The investigation disclosed a preponderance of evidence to prove the allegation(s) made in the complaint.

When the Hiring Authority sustains an allegation of employee misconduct following review, a recommendation shall be made for corrective action.

31140.15 Adverse Personnel Actions Resulting From an Investigation/Inquiry

If an employee misconduct investigation/inquiry results in a finding that any allegation of employee misconduct is sustainable, the Hiring Authority shall decide whether or not to initiate an adverse personnel action. When a decision is made to initiate an adverse personnel action, the provisions of DOM 33030 shall be followed.

31140.16 Maintenance of Investigation/ Inquiry Records and Files

The Hiring Authority shall ensure the proper maintenance and security of investigation/inquiry records and files pursuant to PC 832.5 and 832.7.

Each facility/office shall establish and maintain a central logging system for all complaints originating at that location.

Each complaint, whether initiated by external or internal source, shall be logged and the disposition recorded. OIA shall maintain a complete automated log of all Category I and II inquiries/investigations to include the final disposition and any action taken on the matter.

31140.17 Purging Investigation/Inquiry Records

Investigation/inquiry records shall be purged and destroyed as provided in the Records Disposal Schedule. Purging may be postponed if litigation or potential litigation is pending, or if there are other justifiable reasons. The Regional Special Agent-In-Charge shall forward a request, by memorandum, to the Hiring Authority of each employee investigation and LAD requesting approval/disapproval to purge investigative records. The Hiring Authority/LAD shall review current litigation with appropriate staff before authorizing, in writing, the purging of these records.

31140.18 Revisions

The Assistant Director, OIA, or designee shall be responsible for ensuring that the contents of this section are kept current and accurate.

31140.19 References

GC §§ 3300 et seq., and 19572

PC §§ 832.5, 832.7, 832.8, 13012, and 13012(d).

EC §§ 1043 and 1046.

ARTICLE 14 — SALARY AND COMPENSATION

Effective February 14, 1990

31150.1 Policy

All employees of the Department shall be compensated fairly and impartially.

31150.2 Purpose

This section provides for the following:

- Extra compensation for employees using bilingual skills ten percent or more of the time.
- Salary-related BOC claims from employees.
- Special hiring rates for persons with extraordinary qualifications.
- Determination of salary rates for permissively reinstated employees and merit salary adjustment dates upon reinstatement after a permanent separation.
- Compensation for out-of-class assignments.
- Physical fitness incentive pay.
- Housing stipends.

31150.3 Disclaimer

If any provision in this section is in conflict with a Memorandum of Understanding (MOU), the MOU shall prevail as it relates to the specific represented group.

31150.4 Bilingual Certification/Pay

The Department shall provide bilingual services when a substantial portion of its clientele is non-English speaking or hearing impaired.

31150.4.1 Annual Language Survey

An annual language survey is conducted to determine:

- The number of public contact positions in each local office or facility.
- The number of bilingual employees in public contact positions and the language they speak other than English.
- The number and percent of non-English speaking persons served by incumbents in public contact positions in each local office or facility broken down by native languages.
- The number of anticipated vacancies in public contact positions over the following year.

31150.4.2 Departmental Plan

The Affirmative Action Office evaluates survey results and submits a plan annually to the SPB which includes the following:

- The current departmental policy pertaining to bilingual services, pay and certification.
- An analysis of the survey results, identifying deficiencies and steps the Department is taking to provide bilingual services at those locations where the need is demonstrated.
- A listing of available and proposed translations of departmental forms and publications.
- A listing of additional bilingual services provided; e.g., toll free information numbers, interpreter services, visual displays, and plans to provide additional bilingual services.
- The process used to inform employees that bilingual pay is available for those who qualify, and plans to inform those not aware of the program.

31150.4.3 Requirements

The Bilingual Pay Program provides a monthly pay differential for State employees who use bilingual skills on a continuing basis averaging ten percent of the time. The ten percent includes the actual time spent conversing or interpreting in a second language and related activities performed with the specific bilingual transaction.

To receive the pay differential, an individual must first successfully complete a bilingual fluency examination to become certified bilingual.

Upon successful certification, employees with their supervisor's concurrence shall submit a Bilingual Pay Authorization, STD Form 897 , justifying ten percent use of their bilingual skills in their position.

31150.4.4 Responsibility

The Affirmative Action Office conducts the annual language survey and ensures implementation of policy governing the Bilingual Services Program.

The Personnel Operations Section administers the Bilingual Pay Program.

Local testing offices administer the language fluency examination.

31150.4.5 Process

Employees interested in taking a language fluency examination shall:

- Obtain an Application for Examination, STD Form 678, from the local or Central Office personnel office.
- Complete the application with the following:
    - The competitor's name, address, and social security number.
    - The language in which the competitor is to be tested.
    - The competitor's work location e.g., institution, parole region, etc.

- Submit the application to the local or Central Office personnel office.

31150.4.6 Establishment or Change of a Bilingual Position

Bilingual Pay Authorization, STD Form 897, and an organization chart which identifies the position shall be forwarded by local personnel staff to the Bilingual Pay Coordinator, Personnel Operations Section, when any of the following conditions apply:

- Changes in Position Number. Any change in Unit Code, Classification Code, and Serial Number Code.
- Reassignments. Promotions, transfers from one class to another or change in post assignment which no longer requires use of ten percent bilingual skills.
- New (Bilingual) Positions. Bilingual pay for a position has never been requested.
- Refilling a Vacant (Bilingual) Position. A position is approved and the previous incumbent received bilingual pay.
- Termination of Bilingual Pay. A bilingual position ceases to qualify based on criteria given in this section.
- Change in Incumbent's Work Address. If an incumbent was receiving bilingual pay based on the need for such skill in one location and is transferred to another location, bilingual pay must be justified again for the new location.

31150.5 Salary-Related Board Of Control Claims

BOC Rules Sections 624, 630, 631, and 632 provide the general standards for filing claims against the state.

31150.5.1 Approval of Claims

Each claim shall be submitted to the Deputy Director, ASD, for approval.

31150.5.2 Presentation of Claims

All claims for money or damages against the State shall be presented to the BOC under the following conditions:

- An appropriation or a state fund is available but has been rejected by the State Controller.
- The appropriation made or fund designated is exhausted.
- The settlement is provided for by statute or constitutional provision but no appropriation or fund is available.
- Settlement is not otherwise provided for by statute or constitutional provision.
- On express contract.
- The taking or damaging of private property for public use within the meaning of Section 19 of Article I of the Constitution.
- Based upon the negligent act or omission by a state officer, servant or employee or for the dangerous condition of state property.
- Any other injury for which the State is liable.

31150.5.3 Contents of Claims

All claims or amendments shall be signed by the claimant or representative. Facts shall be stated in simple, concise language without legal phraseology.

31150.5.4 Who May File

Hiring authorities shall initiate and submit BOC claims on an Equity Claim, BC Form1-B, in quadruplicate, to the Chief, Accounting Services, Attention: BOC Claims Coordinator, for situations where improper pay or no pay has been issued because of administrative error or other factor.

Employees and former employees also have the right to file an Equity Claim, BC Form1-B, in triplicate, directly with the BOC. However, such claims are referred by the BOC to the Department for a recommendation.

31150.5.5 Claim Format

Each claim shall include:

- A claim form with:
  - A brief statement describing the reason for the claim.
  - Specific description of how the claim amount was computed.
- A brief cover memo with:
  - The recommendation requested.
  - A brief explanation of the circumstances, problems or errors that led to the need for the BOC claim.
  - What specific steps have been taken to prevent a recurrence.
  - The party to whom payment is to be made; e.g., either the claimant or the Department.
  - A statement on revision of funds if the claim includes payment for a prior fiscal year and the funds have reverted. The funds revert two years following the last day an appropriation is available for encumbrance unless the Director of Finance reverts the funds during that two-year period (see GC Section16304.1).
- All supporting documentation; e.g., Bilingual Pay Authorization Form, Disability Pay Request Form, Payroll Adjustment Form, or other documents as appropriate.

When more than one claim of the same type is being submitted, the hiring authority or designee shall submit all like claims as a package using one cover memo.

31150.5.6 Review

Upon receipt of the claim, Central Office staff shall make any necessary salary verifications and prepare a letter for the signature of the Deputy Director, ASD, or his/her designee, recommending approval or disapproval of the claim.

If approval is recommended by the Department, the letter and original claim shall be forwarded to the BOC for review and processing. A copy of the letter shall be sent to:

- Originating hiring authority.
- Employee (claimant).
- Department's BOC Claims Coordinator.

If disapproval is recommended by the Department, the letter shall be sent to the employee (claimant). A copy of the letter shall be sent to:

- Originating hiring authority.
- Department's BOC Claims Coordinator.

Disapproved claims shall not be forwarded to the State BOC, unless submitted directly by an individual.

31150.5.7 BOC Process

Upon approval and complete processing of the claim, the BOC issues payment or authorization for payment, according to the specific payment instructions recommended by the Department.

If the recommendation instructs that payment be made directly to the Department, the BOC directs its communication (pay warrant or authorization for pay) to the Department.

If the recommendation requests payment directly to the employee, the BOC upon approval of the claim, addresses its communication (pay warrant or authorization for pay) directly to the employee, and sends a copy to the Department.

If the claim is disapproved, the BOC notifies the Department and/or the claimant, as appropriate, indicating the basis for the disapproval and the claimant's legal rights/options for appeal.

31150.5.8 Appeal of BOC Decision

Within six months from receipt of the rejection notice, the claimant may:

- Request a rehearing. A rehearing is granted only with the stipulation and agreement that the claimant provides new information not previously considered by the BOC.
- File suit in small claims court, if the dollar amount is within the limits allowable by law.
- File suit in a superior court, if the dollar amount exceeds the limits for small claims court.

31150.6 Hiring-Above-Minimum (HAM) Salary Rates for Extraordinary Qualifications

The DPA may authorize payment above the minimum step in the salary range in order to bring a person who has extraordinary qualifications into state service. Current state employees shall not be considered for these rates.

Special hiring rates under this authorization may be offered to an unusually well qualified person when the minimum step of the range is not attractive. Firm salary commitments shall not be made prior to official approval.

31150.6.1 Delegated Classifications

The Department has the delegated authority to approve HAMs (second to fifth step, inclusive) for selected medical, nursing and related classifications. This authority and the classifications affected are specified in a DPA memorandum published at the beginning of each fiscal year. A copy of the memorandum is available for review in the institutional personnel offices and Personnel Operations Section, Central Office.

31150.6.2 Approval

HAM requests shall be approved before salary commitments are made and before employees begin work.

The Personnel Operations Section analysts and institutional personnel officers are the approval authority for delegated classifications. Their authority is limited in accordance with the DPA memorandum and any subsequent guidelines published by DPA.

HAMs for other classifications require DPA approval.

HAM requests shall be received:

- By the Personnel Operations Section or institution personnel officer at least five working days before the proposed reporting date for delegated classification.
- By the Personnel Operations Section at least ten working days before the proposed reporting date for classifications requiring DPA approval.

31150.6.3 Standards

Contribution to the Agency

Extraordinary qualifications should provide to the work of the Department a significant contribution beyond that which other applicants offer, for example:

- Expertise in a particular area of the Department's program. This expertise must be well beyond the normal requirements of the class.
- Unique talent, ability, or skill as demonstrated by previous job experience. The scope and depth of such experience is more significant than its length.

The degree to which a candidate exceeds minimum qualifications shall be a guiding factor, rather than a determining one. When a number of candidates offer considerably more than minimum qualifications, it may not be necessary to pay above the minimum to acquire an unusually well qualified person.

The qualifications of state employees already in the same or closely related classes shall be carefully considered since questions of salary equity may arise. Inequity adjustments shall not result from use of this delegation.

Current Salary and Other Job Offers

If the criteria for extraordinary qualifications are otherwise met, the individual's present salary or other bona fide salary offers normally shall be above the first step of the class before the candidate can be considered for a special hiring rate.

Current competitive salary offers shall be verified. The name of persons contacted, telephone numbers and dates of contact, and data obtained shall be included on the request form.

Recruitment Difficulty

Recruitment difficulty is a factor to the extent that a specific extraordinary skill is difficult to recruit, even though some applicants are qualified in the general skills of the class.

Prior State Employment

The Department approves (or requests approval of) HAMs for extraordinary qualifications only for persons who are not now in state civil service. Above-minimum rates cannot be granted retroactively once the individual becomes a state civil service employee.

Prospective employees with prior state service (civil or exempt service, including that with the University of California, state colleges, the Legislature and other groups) shall be evaluated in the same manner as other applicants. However, to qualify for a higher rate of pay than they received as state employees, they shall clearly have qualifications above those they possessed as state employees.

Employees re-entering state service under DPA Rule 599.677, Rate on Reappointment or Reinstatement After Permanent Separation, are not eligible for a special hiring rate under this section.

31150.6.4 Determining the Amount of Adjustment

Established Rate

Once the hiring authority determines that a special hiring rate is necessary to attract an outstanding individual, the hiring authority shall decide which hiring rate to request.

In order to be competitive with other employers, yet offer no more than is necessary, the actual rate granted is an established rate between the minimum and maximum for the class nearest (above or below) to the individual's present salary or other valid job offers. This is any established rate between the existing steps for the class if it will more closely approximate a realistic appraisal of the individual's background and salary history.

Limitations

Special hiring rates are usually limited to two steps above the minimum of the salary range, i.e., the third salary step. When the position has limited promotional opportunity, use of hiring rates above that rate limits the Department's ability to use merit salary adjustments to recognize employee growth and encourage initiative.

Adjustments above the third step shall be processed only when the factors of extraordinary qualifications, present salary, or prospective job offers make a strong case for the particular individual.

Determining the Above-Minimum Rate

The individual's monthly salary (or highest bona fide job offer) is compared to the state's pay ranges in determining the maximum amount to authorize. Money earned through part-time employment is counted in determining the above-minimum rate only when the individual would lose this income by coming to work for the Department.

When an individual's total income covers periods substantially less than twelve months and that individual does not work for the remainder of the year, the income is considered as the function of the number of months worked; e.g., $10,000 per year for a ten month work year is considered as $1,000 per month. When there is additional income from a second job from which the individual must resign, that should be added to the total and the full year considered.

Consideration of Other Offers

Other competitive salary offers from state agencies shall not be used as justification for exceeding these other offers for above minimum rates. When the provisions outlined here are applied correctly, above minimum rates authorized for outstanding qualifications for a given individual shall be identical for all state agencies using the class.

Moving Expense

The salary shall not include a bonus to the candidate to come to the State; however, when relocation involves an unusual moving expense, an above minimum rate may be justified where use of the candidate's qualifications is particularly critical to the Department's program. Advance approval by DPA is required in these cases.

Applicable Authorizations

Under delegation, an individual ordinarily cannot receive above minimum steps under more than one special salary authorization. Regarding entrance into college recruitment classes, it may be found that an individual possesses superior scholastic achievement. Also, there may be a general hiring "plus" rate authorized on the basis of recruitment difficulty. The Department decides which of the applicable authorizations is needed to acquire the individual.

Required Explanation

If the rate approved for the individual does not fall at one of the normal steps within the salary range for that class, the hiring authority shall provide the appointee with an explanation of the possible effect on movement through the salary range under DPA rules.

Corrective Salary Action

Special adjustments for outstanding qualifications are not a substitute for corrective salary action for a class. If there are a number of vacancies in a given class and recruitment is difficult, recruitment "plus" differential or special corrective salary action for the class may be necessary.

31150.6.5 Exceptions to Standards

Requests for rates higher than those authorized under these provisions shall outline the reasons why the request for exception should be approved. Final salary commitments shall not be made prior to DPA's approval of exceptions to these provisions.

31150.7 Permissive Reinstatement Salary Rates

The following guidelines and standards shall be used in determining salary rates for employees who have resigned or retired from state service and who are being permissively reinstated back into state service.

31150.7.1 Maximum Salary Rate

The hiring authority shall first determine the highest potential salary rate provided for by the DPA Rule 599.677. Upon the hiring authority's determination that it is in the best interest of the State, a former employee who permissively re-enters state service may receive a salary above the minimum rate, provided that the reinstatement or appointment is:

Same Class

- To the same class. The salary rate shall not exceed the rate in the salary range received at the time of separation adjusted for the salary range changes for the class since separation.

Different Class/Same

- To a different class with substantially the same salary range as that of the class from which separated. The salary rate shall not exceed the rate the employee could receive if reinstated or reappointed to the same class from which separated.

Different Class/Lower Salary Range

- To a different class with a lower salary range than the class from which separated. The employee may receive any rate in the salary range not to exceed the salary rate last received in the class from which separated adjusted for salary range changes of the later class since the separation.

31150.7.2 Actual Salary Rate

The rate in the salary range an employee receives on reappointment or reinstatement shall be related to the employee's value to the State. The hiring authority shall determine the former employee's value to the State as follows:

- Expertise in a particular area in relation to the vacancy. Talent, ability or skill as demonstrated by previous job experience. The scope, depth and recency of such experience are more significant than length.
- The degree to which an employee exceeds minimum qualifications shall be a guiding factor rather than a determining one. When a large number of prospective employees possess considerably more experience than the minimum, it may not be necessary to appoint above the minimum to acquire unusually well-qualified people.
- The qualifications of state employees already in the same or closely related classes shall be carefully considered since questions of salary equity may arise.
- Recruitment difficulty for the classification and for the geographic area of the vacancy shall be a major determining factor.

31150.8 Merit Salary Adjustment Dates

Merit salary adjustment dates for persons who reinstate following a separation from state service shall be established in accordance with DPA Rule 559.687.

31150.9 Out-of-Class Compensation

Employees designated managerial or exempt are not covered by specific provisions governing out-of-class assignment and are not entitled to out-of-class compensation.

Represented Employees

A number of negotiated MOUs provide for compensating represented employees for temporary out-of-class acting assignments. Refer to the specific MOU and DPA Rule 599.810.

Supervisory/Confidential

Supervisory and confidential employees who are assigned out-of-class acting assignments may be compensated for performing duties of a higher classification if:

- The assignment is made in writing prior to performing the duties, and the employee is given a copy of the assignment.
- The Director certifies that funds are available within the Department's current budget.
- The employee assumes the full range and scope of duties of the higher class.
- The employee performs such duties for more than 15 consecutive working days but no more than 120 calendar days in a fiscal year. (Paid time off shall not break the continuity of work in the higher class.)

An employee may be assigned out-of-class work for more than 120 days during a fiscal year only if the Department files a written statement with DPA.

Assignment Process

See Section 31060 of this manual for temporary out-of-class acting assignment and approval process.

Pay Differential

Supervisory or confidential employees performing in a higher class for more than 15 consecutive working days shall receive a five percent pay differential or the differential the employee would receive if promoted to the higher class, whichever is greater, for the duration of the assignment.

These pay differentials are not part of an employee's base pay for the purpose of other salary transactions related to subsequent appointments.

Payment

The supervisor of an employee working an out-of-class assignment submits a memorandum to the local personnel office at the end of each pay period. The memorandum shall contain the following information:

- Name of unit or division.
- Name of employee.
- A statement clarifying the reason(s) for the out-of-class assignment.
- Signed copy of approved out-of-class assignment.
- Dates employee worked and number of hours, if less than full-time.
- Signature of supervisor.

A denial of an out-of-class compensation claim by the departmental personnel officer may be appealed directly to the Chief Deputy Director.

31150.10 Physical Fitness Incentive Pay Program (PFIPP)

Employees may voluntarily participate in the Physical Fitness Incentive Pay Program in accordance with the following:

Eligibility

- Employees who have five years or more in Bargaining Unit 6 as of December 31 of the prior calendar year.
- Managerial and supervisory employees with peace officer status who have five years or more in a peace officer classification as of December 31 of the prior calendar year.

Compensation

Eligible employees who successfully complete the physical fitness tests shall receive a flat rate of $65.00 per pay period.

The physical fitness incentive pay shall be by separate check and shall not be included for purposes of computing benefits and/or additional compensation.

Eligibility Period

Eligibility period shall be from May 1 through April 30. In order to continue the incentive pay from one period to the next without interruption, an employee must pass the physical fitness tests prior to May 1.

Physical Fitness Tests

To receive the physical fitness incentive pay, an eligible employee shall successfully complete the following fitness tests annually:

Test	Fitness Component Measured
Three-Minute Step Test. This -test will be performed using a bench 12 inches high and a recording of a metronome of 96 beats per minute.	Cardio Vascular
Vertical Jump Test. The individual must reach upward as high as possible and must jump vertically as high as possible as measure of power.	Leg Power
Sit and Reach Test. The individual must sit and reach in order to measure the amount of trunk flexion and ability to stretch the back muscles and hamstring group; or	Flexibility
Sit-ups Test. Lie flat on back with knees bent; must do 14 to 38 sit-ups in one minute, depending on age and sex.	Abdominal Strength
Illinois Agility Run Test. The individual must start the test in a flat prone position, sprint for 30 feet in one direction, and back, run in a figure-eight pattern around a line of chairs and sprint 30 feet up and back to the starting line. This attempts to measure the ability to move with quickness, speed and balance. The participant may start from a standing position if the prone posture would exacerbate a physical injury or disability.	Balance and Agility

Note: Participant chooses either the Sit and Reach Test or the Sit-ups Test.

Each employee shall be allowed two attempts. Employees unsuccessful on their first attempt have 60 days during which they may retest.

PFIPP Coordinator

Each Warden and RPA shall designate a PFIPP coordinator for their institution or region.

The PFIPP coordinator shall:

- Locate an indoor testing space measuring at least 40 feet x 50 feet x 12 feet.
- Identify eligible employees.
- Schedule test dates.
- Prepare and distribute a memorandum to all employees currently receiving the incentive pay.
- Instruct the employees to sign and date the memorandum and return it to the PFIPP coordinator.
- Distribute the following to each eligible employee.
    - Letter to participant.
    - Physical Fitness Incentive Pay Testing Medical History Questionnaire, CYA Form 5.511.
    - CYA/CDC Physical Fitness Incentive Pay Testing Medical Release Form, CYA Form 5.513.

Employee Responsibility

Employees who choose to participate shall:

- Obtain a medical release prior to testing.
- Train and test on their own time and at their expense.

31150.11 Housing Stipend

Specified employees may be eligible for a housing stipend if employed at certain specified institutions as follows:

- Employees in Bargaining Unit 6 shall receive compensation in accordance with the provisions of the Bargaining Unit 6 Memorandum of Understanding.
- Supervisors and managers of employees in Bargaining Unit 6 shall receive compensation in accordance with the provisions of a pay letter issued by the DPA.

31150.12 Revision

The Deputy Director, ASD, shall ensure that the content of this section is accurate and current.

31150.13 References

GC §§ 7290 - 7299.8, 13921, 16304.1, 19780, 19836, 19991.4, and 19991.7.

BOC Rules 624, 630, 631, and 632.

CCR (2) §§ 599.677, 599.687(d) and 599.810.

ARTICLE 15 — RELEASE OF PAYROLL WARRANTS

Revised January 3, 2000

31155.1 Policy

It is the policy of the Department that all employees receive a payroll warrant each payday. For all full-time and fractional timebase employees, payday is the last working day of each pay period (Master Payroll). For intermittent/hourly employees, payday is no later than the 15th day of the following month. These dates may be affected by any late payroll adjustments (e.g., late dock).

SAM 8580.2 states that when a pay period ends on a normal workday (Monday through Friday), departments may release salary warrants anytime on that day after the employee has completed the work for the pay period. When the pay period ends on a Saturday, Sunday, or a holiday, departments may release salary warrants anytime on the last preceding normal workday (Monday through Friday) provided the employee has completed the work for the pay period. If employees are going to deposit or cash their warrants prior to the issue date, they should be cautioned to do so just before bank closing time, or 4:00 p.m., on those days when the banks are open until 6:00 p.m.

Generally, Master Payroll warrants are not to be released until the completion of work on payday or before 3:00 p.m. on payday, whichever is earlier. Payroll warrants released earlier, or at 3:00 p.m., shall not be deposited or cashed before 4:00 p.m.

In the event of staff use of informal administrative time off as granted by the Governor, payroll warrants shall not be released earlier than 12:00 noon of the last working day in December.

SAM provides for salary advances only when errors or delays in submitting or processing documents make it impossible for the SCO to prepare and deliver proper payroll warrants within a reasonable amount of time. The MOUs limit the number of annual salary advances, and identify the time frame in which late dock salary advances shall be issued.

31155.2 Purpose

This section sets forth the procedures for the early release of payroll warrants and the release of payroll warrants after normal work hours, and addresses late dock salary advances.

31155.3 Direct Deposit

Employees may avoid this process by signing up for direct deposit of their payroll warrants. It is strongly urged that employees make arrangements for Direct Deposit of their payroll warrants. STD Form 699, Direct Deposit Enrollment Authorization, may be obtained from the Personnel Office. The bank routing number from the financial institution will be necessary. It will take approximately 30 to 45 days from the time the SCO receives the STD Form 699 to credit the employee's payroll warrant to the designated bank account.

31155.4 Early Release of Payroll Warrant

Payroll warrants may be approved for early release, but no earlier than one day prior to the normal payday. Early release of the Master Payroll warrants may be allowed for the following reasons:

- Employees are required to travel on State business on payday.
- Employees are called away on personal emergencies or for unforeseen urgent matters on payday.

Acceptable Reasons

Examples of personal emergencies or unforeseen urgent matters include, but are not limited to, the following:

- Death in the immediate family.
- Medical emergency or sudden illness in the family.
- Acts of vandalism which have caused significant damage to a vehicle which requires immediate repair.
- Emergency home repairs due to unforeseen events such as fire, flooding, storm damage, theft, or vandalism.

Good judgment should be used in requesting and approving early release of payroll warrants.

31155.4.1 Responsibilities of an Employee Requesting an Early Release of a Payroll Warrant

To request an early release of a payroll warrant, an employee shall complete a CDC Form 1816, Request for Early Release of Payroll Warrant, and include:

- The need for an early release of a payroll warrant with sufficient explanation of the circumstances, i.e., away from the work place on payday due to State business travel, personal emergency, or unforeseen urgent matter and not on leave status.
- Employee’s signature stating the payroll warrant will not be deposited or cashed before 4:00 p.m. on the official payday.

Early release of payroll warrants shall not be approved if the employee is:

- Utilizing leave credits for other than personal emergency or unforeseen urgent matters on payday.
- On extended sick leave.

Employees in these situations have the following options:

- Provide a self-addressed, stamped envelope in which to have their payroll warrant mailed.
- Initiate Direct Deposit with their bank or credit union.
- Designate, in writing, another person (including the designated person’s social security number) to pick up the employees’ payroll warrant(s) for them.
- Obtain their payroll warrant upon returning to the workplace.

Employees with flexible work schedules may not request early release of their payroll warrant because payday falls on one of their regular days off (RDO). If employees are on a mandatory 4/10 timebase, the accounting office will release their payroll warrants upon completion of their work shift, at the end of the pay period, but not more than one day before payday, and only if payday falls on one of their RDOs.

Note: Violations of the early warrant release policy may result in suspension of all early releases of payroll warrants at the facility, parole region, or headquarters. If control agencies note widespread violations, CDC may be suspended from releasing any payroll warrants early.

31155.4.2 Designation of an Early Release Request Reviewer

Wardens shall designate a staff member, at a level of Business Manager II or above, to review all CDC Form 1816s for their respective facilities.

Since payroll warrants of parole region staff are normally mailed to the parole region offices prior to payday, each Regional Parole Administrator shall be responsible for the approval of any early release of payroll warrant requests for their respective regions. Regional Parole Administrators may designate their Deputy Regional Parole Administrator or their Assistant Regional Parole Administrator to review all CDC Forms 1816 for their respective parole regions.

The Chief of Accounting Management Branch, headquarters, is the designated reviewer for headquarters' units and for P&CSD.

31155.4.3 Responsibilities of the Supervisor of the Requestor

Prior to signing and forwarding the CDC Form 1816, it is the responsibility of the supervisor of the requestor to:

- Review the request.
- Verify the personal emergency or unforeseen state of urgency for appropriateness.
- Verify the employee will be away from his or her work site on State business on payday.
- Verify the employee has sufficient leave credits available to cover the completion of work in the pay period.
- If approved, sign the CDC Form 1816 and forward it to the designated reviewer with all the appropriate supporting documentation.
- If denied, return the CDC Form 1816 to the employee.

31155.4.4 Responsibilities of the Designated Reviewer

Prior to signing and forwarding the CDC Form 1816, the designated reviewer shall:

- Review the request for appropriateness.
- Request further verification, if necessary.
- If approved, sign the CDC Form 1816 and forward it to the accounting office or to the parole unit office with all of the appropriate supporting documentation.
- If denied, return the CDC Form 1816 to the employee.
- Maintain a copy of each CDC Form 1816 (approved or denied).

31155.4.5 Responsibilities of the Accounting Office/ Parole Unit Supervisor

The accounting office or parole unit supervisor for the parole region shall:

- Notify the employee when the payroll warrant may be picked up.
- Maintain a warrant log of the payroll warrant number, employee name and signature of employee when he or she picks up the payroll warrant. Substitutions for a warrant log must receive prior approval from the Chief of Accounting Management Branch in headquarters.

31155.5 Late Dock Salary Advance

When an employee does not receive a payroll warrant on payday, the Department agrees to issue a salary advance, consistent with the MOU and Department policy and under the following conditions:

- When errors or delays occur in processing the payroll documents through no fault of the employee, a salary advance shall be issued on payday for an amount close to the actual net pay.
- For represented employees in Bargaining Units 2, 7, 9, 10, 13, 15, and 16, there shall be no more than two salary advances in a calendar year. A salary advance for employees with late dock shall be issued within five workdays after payday.
- For represented employees in Bargaining Units 4, 11, and 14, there shall be no more than four salary advances in a calendar year. A salary advance for employees with late dock shall be issued within five workdays after payday.
- An employee with late dock who has exceeded the maximum number of salary advances allowed by his/her respective MOU shall receive his/her corrected SCO payroll warrant when it has been reissued by SCO.

31155.6 Release of a Payroll Warrant After Hours, Weekends or Holidays

This section only pertains to 24-hour facilities. There shall be no provisions for release of payroll warrants after-hours, weekends, or holidays for headquarters staff.

Wardens should establish procedures for releasing payroll warrants other than on normal workdays (Monday through Friday) and normal work hours (8:00 a.m. to 5:00 p.m.) and ensure that:

- Staff (e.g., control room or assignment staff) are not designated to handle payroll warrants if their duties are incompatible with the requirements regarding the handling of payroll warrants. (See DOM 31155.6.1.)
- A warrant issuance log is maintained by the above-designated staff. The warrant issuance log shall include the warrant number, printed employee name, and the signature of the employee whose payroll warrant is being released.
- In lieu of the above warrant issuance log, a printed alpha roster with the names and social security numbers of all employees may be used. Warrant numbers must be printed on the roster.
- The facility designates a secured area where the payroll warrants shall be locked safely when unattended and available only to the designated staff.
- The facility establishes procedures to transfer custody of the payroll warrants and the warrant issuance log:
    - Between designated staff at each change of shift.
    - When the payroll warrants and warrant issuance log are picked up from and returned to the accounting office.

This procedure shall require the designated staff to be fully accountable for payroll warrants at all times; and that the undistributed payroll warrants and the completed warrant issuance log will be returned by the designated staff to the accounting office on the first normal workday after the weekend and/or holiday when the accounting office opens.

Unless a facility is unable to meet all of the above requirements or has other extenuating circumstances that would prohibit implementation, all Wardens are strongly urged to implement a process for releasing payroll warrants after-hours, on weekends, and holidays. Implementation of such procedures shall not result in additional cost to the State, nor affect institutional security.

If a facility cannot meet any one of the above requirements, the Warden may seek an exemption from the requirement if an alternative means is established to compensate for that requirement. Exemption from any of the above requirements shall be made in writing to:

California Department of Corrections
Chief - Accounting Management Branch
P.O. Box 942883
Sacramento, CA 94283-0001

It is strongly recommended that all accounting offices extend their hours each payday to accommodate as many of the different shifts/work schedules as possible and minimize the need to establish procedures for releasing payroll warrants during weekends or holidays. Payroll warrants released shall not be deposited or cashed prior to 4:00 p.m. on payday.

31155.6.1 Designation of Staff to Distribute and/or Handle Payroll Warrants

SAM 8580.1 states persons designated by agencies to distribute salary warrants to employees, or to handle salary warrants for any other purpose, shall not be authorized to process or sign any of the following personnel documents:

- CDC Form 113-A, Proof of Lost or Destroyed Payroll Warrant.
- CDC Form 113-B, Request for Issuance of Duplicate Warrant.
- STD Form 456-A, Personnel/Payroll Transaction.
- STD Form 603, Report of Absences Without Pay.
- STD Form 666, Report of Exceptions to Payroll.
- STD Form 672, Attendance Report.
- STD Form 673, Report of Extra Hours to be Paid.
- STD Form 674, Payroll Adjustment Notice.
- STD Form 680, Personnel Action Request.

Additional forms that shall not be processed or signed by persons designated to distribute or handle payroll warrants are:

- CDC Form 998-A, Employee Attendance Record.
- STD Form 671, Miscellaneous Payroll/Leave Action Form.

As outlined in ASB 1991-6, and in SAM 8080, for the purposes of separation of duties and adequate internal control, payroll warrants shall not be disbursed by the person who authorized the disbursement, nor by the person who prepared the warrant.

31155.6.2 Responsibilities of the Accounting Office

The accounting office shall prepare a warrant issuance log that identifies the total number of payroll warrants turned over to the designated staff. The warrant issuance log shall be released to the staff member(s) designated by the Warden. The designated staff will sign for the payroll warrants.

On the first normal workday after the weekend or the holiday, the accounting office will receive the warrant issuance log and the undistributed payroll warrants from the designated staff. The accounting office will be responsible for verifying the warrant issuance log against the remaining payroll warrants.

Leaving the payroll warrants for an extended period of time outside the accounting office with another unit is not recommended.

31155. 7 Revisions

The Deputy Director, ASD, or designee is responsible for ensuring that the contents of this section are kept current and accurate.

31155.8 References

SAM §§ 8080, 8580.1, 8580.2 and 8595.

ASB 1991-6.

ARTICLE 16 — MANAGERIAL PERFORMANCE APPRAISAL SYSTEM

Effective April 22, 1991

31160.1 Policy

Public concern regarding the cost of government has motivated legislators and public administrators to increase the efficiency and effectiveness of government. One point of focus has been in the area of employee performance appraisals.

Recent advancements in the development of appraisal methods have renewed efforts to make better utilization of this powerful management tool, especially as it applies to mangers. Performance appraisal properly carried out enhances clarification of job duties and responsibilities.

31160.2 Purpose

The Managerial Performance Appraisal System (MPAS) provides more effective management by recognizing superior performers (through bonuses), and serving as an incentive for managers to strive toward efficiency and prepare them for promotion. The program is designed to communicate and clarify work objectives; provide a standardized method of reporting work performance; distinguish between superior, good, and poor performers; and help deal with below standard managerial performance.

31160.3 Participants

Participation in MPAS is mandated by GC 19992.8 through 19992.14. Exceptions to non-participation shall be approved by the Chief Deputy Director. The MPAS Coordinator shall be provided with written notification of such action.

Classification of Participants

Permanent or limited-term employees in a designated managerial classification . A managerial classification is defined as an employee having significant responsibilities formulating of administering Department programs and policies as mandated in GC 3513 (e). Exempt employees, except those designated as higher level reviewers, are also included.

Ineligible Participants

Non-managerial employees who are serving on training and development assignments to designated managerial classes are ineligible to participate, as are managerial employees who are on training and development assignments to non-managerial classes. Similarly, employees on acting assignments to designated managerial classes are not eligible to participate.

Separated Employee Participants

Managers who retire, leave State service or voluntarily demote to a non-managerial position are also covered if they participate in the minimum appraisal period as defined below. Additionally, managers assigned temporarily outside their parent organization or those who transfer between departments are covered if they meet the minimum appraisal period requirements.

Immediate Supervisor

The supervisor who is responsible for rating the manager quarterly and annually.

Designated Higher Level Reviewer

The appointing authority, or the Chief Deputy Director/Director, who makes final evaluation and bonus decisions.

The designated higher level reviewer (Warden, RPA, Deputy Director, Chief Deputy Director or Director) reviews the quarterly and final rating and nominates bonus recipients. These individuals are exempt from MPAS as their role presents a potential conflict of interest.

31160.4 Appraisal Period

The MPAS appraisal period begins July 1 and concludes June 30 each year. Evaluations are due at the end of every third month (September, December, March and June) with the final or annual evaluation also due by June 30.

Minimum Appraisal Period

The minimum appraisal period is 90 days. Managers employed for less than 90 days during an appraisal year will not be included in the program.

Minimum Bonus Appraisal Period

The minimum participation period for bonus eligibility is 180 days. Appraisal quarters may be added together to meet the 180-day minimum. Routine vacation and sick leave are not subtracted from the 180 days; however, extended leave of 60 days or more is subtracted.

31160.5 Appraisal Process

Appraisals shall be based on organizational goals. Each manager will be assessed on their contribution toward the accomplishment of those goals. Organizational goals shall be translated into annual work plans consisting of critical elements for each manager.

31160.5.1 Work Plans

Each manager shall have a work plan prepared and approved prior to the beginning of the appraisal year. A narrative or memorandum style is acceptable. This plan is developed by the manger and their supervisor, signed as acceptable by both and shall contain the performance elements to be accomplished by the manager during the year.

When MBO goals relate to the manager's scope of responsibility, MPAS work plan elements should incorporate the departmental Management by Objective (MBO) goals.

Any revision to the work plan should be entered within the quarter in which they are effective and initialed by both the supervisor and manager.

Managers appointed after submission of annual work plans will assume the work plan previously developed for the position of a pertinent one exists or will prepare/revise within 90 days of their appointment.

31160.5.2 Critical Elements

The critical element of a work plan is one of such importance that accomplishment of it is essential to the work unit's mission.

Criteria

Each manager's work plan shall contain at least three critical elements. The DPA recommends that no more than seven critical elements be developed.

Critical elements should represent the main thrust of the manager's position and meet the following criteria:

- Give a precise definition of the expected accomplishment.
- Be Challenging, attainable and within the manager's control
- Be clearly stated in terms of needs, specific results, and time periods for each critical element.
- Be subject to reliable periodic measurement that the projected effort is on course and on time.

Critical elements must have "milestones" that can be measured each quarter. This will enhance the review and rating process as well as point out needed modifications to the work plan. Example,"...complete an on site audit of each institution's appeal procedure for compliance with policies, procedures, at the rate of three institutions per quarter, with a report on the first three institutions due September 30, 1991."

Managers are encouraged to develop critical elements that will span the entire 12-month period to provide a better basis for evaluation. Each work plan should include a minimum of one critical element, that expires in June. Work plans whose critical elements are all scheduled for completion prior to June do not allow for complete quarterly evaluations and ratings.

31160.5.3 Noncritical Elements

MPAS replaces the use of individual development plans for designated managers. Plans for self-development and/or training to be accomplished during the appraisal year shall also be included in the work plan as "non-critical elements". These elements shall not be a determining factor for bonus nomination, as the final ratings shall be based on accomplishment of the critical elements only.

Supervisors may continue to provide performance evaluation summaries for subordinate managers to document their performance in areas beyond the scope of MPAS.

31160.5.4 Evaluation Standards

Evaluations are based on each manager's self-assessment that are prepared quarterly. These self-assessments should provide specific information on the manager's progress toward meeting the critical elements of the work plan. The self-assessments are submitted to the rater for review and form the basis for the manager's quarterly and final summary ratings.

The Managers' General Standard (MGS) provides the yardstick by which managers are measured regarding accomplishment of their critical elements . The yardstick provides fair, equitable and consistent expectations for basic types of activities that are relevant to all state managers. Use of the MGS critical elements does not preclude adding standards for specific accomplishments of a manager's job.

While these standards can be used to hold managers accountable for performance in these areas, the decision to grant a bonus must be supported by "Fully Successful" or above performance on critical elements.

Managers who believe that any element is the MGS does not apply to their duties may submit written justification as to why they should not be appraised on that element. Exceptions however, should be infrequent.

Rating Levels

Five rating levels are used:

- Outstanding.
- Exceeds Fully Successful.
- Fully Successful.
- Minimally Successful.
- Unsatisfactory.

Most ratings for valued, competent managers will be "Fully Successful," which is the level of performance expected of a manager. Relatively few managers should fall into the remaining categories.

31160.6 Rating and Review Process

Progress reviews shall be discussed with each manager quarterly and any time their performance falls below the "Fully Successful" level.

Responsibility of Participants

At the end of each quarter, the participating manager shall prepare and submit a self-evaluation and any supporting documentation to their supervisor for review. The supervisor should address the self-assessment in the progress discussion and consider the documentation when assigning the rating. If, due to intervening priorities, a quarterly objective cannot be met, the work plan due dates should be revised, objectives should be deleted, or new objectives should be included.

Responsibility of Supervisor

Ratings will be assigned at all formal reviews. These ratings shall be recorded on the Managerial Performance Appraisal Summary and signed by the supervisor and managerial employee. The recommended rating and any employee comments shall be submitted to the designated higher level reviewer at each institution, parole region or headquarters unit, and ultimately to the respective deputy director.

Responsibility of Higher Level Reviewer

The higher level reviewer shall:

- Determine if the ratings are factually accurate, properly documented, and consistent with their own impression of how the employee's performance meets the MGS.
- Consider any employee comments/appeals and determine what impact, if any they should have on the ratings.
- Consider all submitted ratings collectively to ensure that the managerial rating standards are being consistently applied and that the overall group of ratings effectively and accurately distinguish the various levels of performance that are present within the rating group.

Any changes in the ratings shall be supported by written comments and must be communicated back to the employee and supervisor. Employees shall also be provided an opportunity to submit comments/appeals on ratings that are lowered.

Each division shall establish a system or location for retention and retrieval of substantiating documents for audit purposes, (e.g., having division coordinators retain the documentation; having the rater retain the actual documentation and submit a summary of the employee's progress with the quarterly review; or submitting the documentation with the quarterly review an returning it to the rater after review by the deputy director.) EC&ISD coordinates the appraisal/bonus process for managers reporting to the Directorate.

Semi-Annual Review

A semi-annual summary report of work plans, reviews and ratings will be submitted by each division to the Department Coordinator at the end of the second quarter. The Department Coordinator will consolidate these reports and advise the Chief Deputy Director of the status to the program.

Final Review

Overall ratings for the entire appraisal ear are assigned at the end of the fourth quarter and are included as part of the fourth quarter progress review discussion.

Appraisals shall be given to all managers transferring to anther department, upon departure, if the period worked exceeds 90 days in the current appraisal year. This report will be included in the year-end appraisal.

The organization that a manager is permanently assigned at the end of the appraisal year shall prepare the final appraisal unless otherwise requested by the manager. A manager at their discretion may receive consideration from another department or organizational unit where they served during the year by submitting a written request to that department or organizational unit on or before June 30. The manager shall also at their desecration submit a copy of this request to the department where they are currently assigned.

31160.7 Responsibilities

The following are the specific responsibilities for all participants in the MPAS.

Participants' Responsibilities

Work Plans:

- Prior to the beginning of the appraisal year, each manager shall prepare and submit a designated manager Work Plan and Managerial Performance Appraisal Summary, STD Form 750, for the fiscal year. Managers appointed after the beginning of the appraisal year must either assume the existing work plan for their position or prepare/revise on within 90 days of appointment.
- Work plans shall include critical an noncritical elements.
- Each manager and their supervisor shall discuss the work plan. Both must signify acceptance of the plan by signing the STD Form 750, Part A.
- Work plans are subject to deputy director concurrence.

Quarterly Review/Final Appraisal Summary:

- Each manager prepares a self-evaluation of progress in meeting established objectives. The evaluation and any supporting documentation is submitted to their supervisor prior to the review discussion.
- A formal discussion between the manager and supervisor shall be held each quarter to review progress in meeting, or not meeting, the established objectives. Ratings shall be assigned at each formal review Both the manager and supervisor shall initial and date the assigned rating on the STD Form 750.
- Work plans may be revised at the time of the quarterly review. Revised plans shall be signed by both the employee and supervisor and are subject to deputy director concurrence.
- An exit review shall be conducted and a rating assigned when an employee vacates a managerial position if the appraisal period exceeds 90 days.

Supervisors' Responsibilities

Work Plans:

- Supervisors must ensure that a work plan and STD Form 750 are completed before the beginning of the appraisal year for each manager under their supervision, or within 90 days of appointment is after the beginning of the appraisal year.
- A discussion of the work plan takes place. Both the manager and supervisor must signify acceptance of the plan by signing Part A of the Form 750.
- Work plans are subject to the deputy director' concurrence, and copies must be submitted to the deputy director, by the Division, Institution and Parole Region MPAS Coordinators.

Quarterly Reviews:

- At the conclusion of each quarter a discussion of the employee's progress in meeting his or her established objectives shall be held and a rating assigned.
- Changes to the work plan may be made at this time and are subject to the procedure outlined under "Work Plans".
- Prior to the discussion, the supervisor reviews the self-evaluation and any substantiating documentation submitted by the employee. This information should be considered when assigning the quarterly rating.
- An exit review must be conducted and a rating assigned when an employee vacates a managerial position if the appraisal period exceeds 90 days.

31160.7.1 Division, Institution MPAS Coordinators' Responsibility

Deputy Directors and Institution Wardens shall appoint an MPAS coordinator.

The Division/Institution MPAS Coordinators shall act as the liaison for managers and raters; monitor the completion and submission of work plans, quarterly reviews, semi-annual rating summaries, final appraisals, substantiating documentation and bonus awards and recommendations; and disseminate information to managers, raters and deputy directors, as appropriate.

Work Plans:

- Verify that each eligible managerial employee prepares a work plan and STD Form 750 for the fiscal year prior to the beginning of appraisal year.

- Verify that a work plan is completed or revised within 90 days when a managerial employee is newly appointed or a previously vacant managerial position is filled. Work plans may be transferred to an employee filling a position where a work plan was previously completed.
- Verify that the work plan is signed by both the employee and the rater signifying acceptance of the terms of the plan (the signature blocks are found in Part A of the STD Form 750).
- Maintain a log of work plans received.

Quarterly Reviews:

- Quarterly reviews of performance are mandatory. Coordinators ensure completion and submission of these reviews within 15 days after the end of the quarter.
- Log the rating.
- Ensure that reviews are done for employees who terminate employment, transfer, promote or demote (to a nonmanagerial position) within the division, institution and parole region or to another division or agency.

Semi-Annual Report:

- A semi-annual summary report of reviews and ratings is forwarded to the Department MPAS Coordinator following the end of the second quarter.

Final Appraisal Summary:

- Ensures completion and submission of the final appraisal summary for all participants.
- Submits final appraisal summaries (for those employees being recommended for bonus awards) and all supporting documentation to the Department MPAS Coordinator.

31160.7.2 Deputy Director's Responsibility

The work plans for each designated manager within the division, institution and parole region are reviewed by the deputy director or designee for compliance with the criteria described in Section 31160.5.1. Exceptions to participation shall be reviewed and approved by the deputy director prior to submittal to the Chief Deputy Director. When necessary, the work plan is returned to the manager for additional information, clarification or milestones. When changes are necessary, a new plan is prepared and signed, or the employee and rater may initial changes made to the original work plan.

Final appraisal summaries and supporting documentation are submitted to the deputy director at the end of the appraisal year.

Each deputy director may recommend up to 20% of the managers within the division for bonus award consideration.

Bonus nominations are submitted to the Chief Deputy Director. An executive summary of each manager's accomplishment and an explanation of the significance to Department is prepared and submitted in lieu of actual supporting documentation . This summary, the STD Form 750, a copy of the original work plan and any revisions to the work plan must be sent to the Department MPAS Coordinator.

31160.8 Department MPAS Coordinator

The Department MPAS Coordinator (Personnel Office staff member) shall act as liaison for the Division MPAS Coordinators and disseminate information regarding DPA and the Department's policies and procedures relative to MPAS. Additionally, the Department MPAS Coordinator shall:

- Monitor completion of work plans, semi-annual reviews and ratings, final appraisal summaries, supporting documentation, bonus award recommendations and bonus awards.
- Analyze the above for consistency and adequacy and work with the Division MPAS Coordinators and/or deputy director when changes are necessary. This shall include reviewing bonus nomination packages, and returning for further clarification or forwarding for the Director's approval.
- Prepare participating manager listings semi-annually and distribute to Division Coordinators.
- Prepare semi-annual status report for the Chief Deputy Director.
- Prepare year-end summaries for the Chief Deputy Director regarding bonus recommendations, funding and award allocations.
- Gather work plans and supporting documentation of bonus recipients from divisions, institutions and parole regions for DPA audit purposes. Respond to DPA inquiries and prepare reports as necessary.
- Prepare congratulatory letters for Director's signature. Advise the headquarters personnel transactions office of bonus payment procedures.
- Monitor the payment procedure to assure checks and congratulatory letters are delivered in timely manner.

31160.9 Documentation Required for Rating Levels

When performance is reported as "Unsatisfactory", it shall be accompanied by documentation that includes a recommendation for adverse action such as salary reduction, demotion, separations, etc.

Ratings of "Minimally Successful" require an explanation of the deficiencies and what steps are being taken to resolve the deficiencies.

If the "Unsatisfactory" or "Minimally Successful" rating is due to mitigation circumstances, adverse action is not necessary; however, an explanation of the circumstances shall accompany the appraisal.

"Exceeds Fully Successful" ratings require an explanation as to how the performance is notably better than "Fully Successful", e.g., what high quality work was completed ahead of scheduled deadlines with less than normal supervision.

"Outstanding" ratings require documentation demonstrating that an exceptionally high quantity and quality of work was performed with little or no supervision.

31160.10 Bonus Nomination/ Selection Process

Bonus determinations are made on a case-by-case basis in comparison with the accomplishments of other managers in the organization. Managers who receive ratings of "Exceeds Fully Successful" or "Outstanding" throughout the year are eligible for bonus awards.

In exceptional cases, an employee may be rated "Fully Successful" on quarterly reports and nominated to receive a bonus. In these rare situation where the critical elements of the work plan, in and of themselves, are so significant that fully successful performance far surpasses outstanding performance on objectives of a more routine or common nature, the employee may be recommended for a bonus. In such cases, the deputy director must provide supporting documentation that clearly justifies why the bonus is warranted.

Typically, managers receiving less than fully successful on any quarterly report will not be recommended for a bonus.

The Department has established bonus awards for 20 percent of its qualifying participants. To equitably distribute the awards, the bonuses shall be allocated each year on a pro rata basis to each division, institution, and parole region calculated on the number of participants with 180 days or more in the program. This means that the total number of bonus awards allocated to each division, institution, and parole region shall be based on 20 percent of their participants.

Bonus awards may range from $1,250 to $5,000; however, the Department typically limits the maximum amount to $2,500. Awards over $2,500 may be granted in extremely rare cases and must be supported by exceptional justification.

Bonus award amount guidelines:

Outstanding	$2,000 to $2,500
Exceeds Fully Successful	$1,500 to $2,000
Fully Successful	$1,250 to $1,500

Bonus award decisions shall consider all qualifying performance during the appraisal year, including those occurring in other departments or organizational units. Managers who retire, leave state service or voluntarily demote to a non-managerial position may be considered for a bonus if the period worked exceeds 180 days.

The final appraisal, with all required substantiation attached, shall be submitted to the deputy director. The deputy director will review each appraisal and select managers for bonus nominations.

Bonus Nomination Package

The bonus award nomination package shall include:

- An executive summary of the manager's accomplishments and the significance to the Department. This summary should specify how the manager met or exceeded the critical elements in their work plan and how the accomplishment of the critical elements benefited the Department. The summary should also include the recommended bonus amount and a brief explanation if the amount exceeds the guidelines. This will assist in post-audit reviews by DPA .
- The completed appraisal summary form that contains all the quarterly rating as well as the final rating and participant's signatures.
- The original work plan with any revisions.
- Any actual documentation such as self-evaluations, legal documents, graphs, charts or other records should be retained by the division.

Nomination packages are submitted to the Chief Deputy Director, by the Department MPAS Coordinator, for final approval by September 20. The Director and Chief Deputy Director retain final authority for all bonus award decisions. Awards shall be determined by November 1 and payments shall be made by December 15.

Bonus checks are issued by the SCO. The Department MPAS Coordinator will work with Personnel and Payroll Services to request the bonus warrants, prepare a letter of congratulations for the Director's signature, and distribute the checks and letters for presentation to the nominees. The awards may either be sent by mail or made in person, at the discretion of the Warden or deputy director.

3160.11 Appraisal Appeal Process

The appraisal appeal process provides managers an opportunity to appeal their appraisal. The basis for an appeal is that the performance appraisal report was used to abuse, harass or discriminate against the managerial employee.

31160.13 Revisions

The Deputy Director, Administrative Services is responsible for ensuring that this section is current and accurate.

31160.13 References

GC §§ 19992.8 - 19992.14.

CCR (2) (1) §§ 599.796 and 599.796.1.

ARTICLE 17 — PERSONNEL EXAMINING

Revised January 5, 1993

31170.1 Policy

Examinations for the establishment of eligible lists shall be competitive and administered in a uniform manner consistent with applicable laws, policies, and sound personnel practices.

31170.2 Purpose

This section outlines the procedures and requirements that shall be followed for examinations and identifies sections/units involved in examining for The Department.

31170.3 Definitions of Testing Options

Testing options available to administer state examinations are as follows:

Decentralized Testing

SPB grants civil service testing authority to departments for promotional and service-wide open examinations for classifications unique or primary to a specific department.

Delegated Testing

A department under the SPB's decentralized testing program is granted authority to delegate civil service testing for classifications specific to one location to enable timelier, more cost effective eligible lists when candidate numbers are typically small.

Open Examination

Utilized when examining for entry-level, specialized or technical classes and the qualified candidate group is outside of state service working in private industry. Career Credits do not apply. Veterans Preference Credits are applied to the open list only if the examination is an entry-level examination (requiring less than a Bachelor's Degree and two years' experience).

Open & Promotional

Utilized when there is an identified, qualified promotional group which is not of adequate size to meet the needs of the department. In this examination, two eligible lists are established (a promotional list and an open list). The promotional list shall be used before the open list. Career Credits do not apply. Veterans Preference Credits are applied to the open list only if the examination is an entry-level examination (requiring less than a Bachelor's Degree and two years' experience).

Open Non-Promotional

Utilized to open competition to both State and private industry employees to produce eligible lists with more highly qualified candidates. Career Credits are applied to the final score of state employees with permanent status. Veterans Preference Credits may apply.

Promotional

Utilized when a qualified candidate group of adequate size is within state service. Career Credits and Veterans Preference Credits do not apply.

Subdivisional

Limits competition to those employed in a specified division or organizational unit within a department that has its own appointing authority.

Statewide

Administered throughout the State in locations where examining facilities are available. This applies to open exams that have positions throughout the State, such as the Telecommunications Technician classification. In this instance, a CDC Form 631, Conditions of Employment, shall be used to determine the location preference of the candidates.

Spot or Local

Administered in a county or a specific geographic location such as Los Angeles County for the purpose of establishing an employment list to fill vacancies in the particular location. Spot or local examinations can be administered either on an open or promotional basis.

Area

An area examination is restricted to a certain geographic location such as San Francisco Bay Area, Northern or Southern California, Sacramento/Yolo Counties. The counties are to be adjoining and candidates shall take the examination for that area only. This applies mainly to open examinations.

Departmental

Limits competition to qualified competitors employed in a specific department.

Multi-Departmental

Limits competition to those employed within agency, such as Department of Water Resources, State Water Resources Control Board, and the Air Resources Board or specific departments, such as the Franchise Tax Board and the Department of Finance.

Servicewide

Allows all qualified state employees to compete without regard to the department in which they work. This type of examination would be administered by SPB and departments with decentralized testing authority.

31170.4 Common Examination Procedures

Laws and rules that govern the administration of examinations within the State’s civil service merit system are complied with through the testing entities within the Department.

31170.4.1 Examination Application Acceptance Policy

Examination bulletins publicize final filing dates designed to allow a reasonable time for interested persons to file an application on or before the final filing date.

Strict adherence to filing dates is required by the SPB.

Applicants should be encouraged to file early to ensure timely receipt of their applications.

31170.4.2 Timeliness Determination

If a mailed application is received after the final filing date, the cancellation date stamped on the envelope by the USPS is used to determine whether the application was mailed on or before the final filing date. To avoid dispute, applicants who mail at a USPS Office should obtain a certificate of mailing receipt. This is acceptable proof that the application was submitted in a timely manner. The applicant shall ensure the application is postmarked on or before the final filing date.

Applications placed in interdepartmental mail and not received on or before the final filing date shall be considered LATE applications and will be rejected from the examination.

Following are the conditions under which late applications typically shall **not** be accepted:

- The applicant claims they did not see the bulletin because of distribution problems within the reporting unit.
- The applicant gave an application to another person to turn in to the office that is administering the examination, but it is not received on or before the final filing date.
- The applicant claims the application was mailed, placed in interdepartmental mail, or hand-delivered to the Personnel Examining Section (PES) or other CDC testing offices on or before the final filing date.

A late application shall be accepted under these conditions only:

- If the applicant has a written statement from a USPS official or other witness who verifies the application was mailed on time.
- If the application is postmarked after the final filing, and the USPS verifies in writing this was caused by USPS error.

Following are the conditions under which late applications **may** be accepted:

- The hiring authority verifies in writing that the examination bulletin was not received by the local testing office because of bulletin distribution problems - prevented the employee from being properly notified.
- The unit manager verifies the employee was away from their work during the entire publicity period.
- The application delay was caused by the PES or field office staff error (for instance, an application was returned to an applicant in error).
- Though submitted in error to SPB, the personnel office of another State agency, or another local testing office, the application was either postmarked or date stamped by the State agency or local testing office on or before the final filing date.

31170.4.3 Examination Bulletin Distribution

Examination bulletins are sent to all reporting units in CDC's headquarters (including off-site units), facilities and parole offices.

The local manager shall ensure that all examination bulletins are posted in a place visible to all employees and the public.

Employees shall be responsible to keep themselves informed of testing for classifications currently being administered.

31170.4.4 Testing Information

Examinations scheduled for testing are listed and recorded for easy public access by various state agencies. Recorded message lines are provided by state agencies, including CDC and SPB, and in the California State Telephone Directory. When telephone numbers become obsolete, individuals can contact the State of California Operator on a state telephone line for current information by dialing "0", or on a public telephone by dialing the following:

Sacramento	(916) 322-9900 or CALNET 492-9900 (916) 657-9900 or CALNET 437-9900
Los Angeles	(213) 620-3030 or CALNET 640-3030

(California Integrated Telecommunications Network (CALNET) replaces ATSS system.)

Current testing information for CDC and SPB is available from the following sources:

- CDC's Examination Line: (916) 322-2694-CALNET 492-2694.
  - Announces examinations being administered by CDC's PES and promotional examinations that SPB is currently administering which includes CDC.
  - TDD* Line (California Relay Service) 1-800-735-2922
  - (TDD is a Telecommunications Device for the Deaf. The California Relay Service relays calls between a person using a TDD and any other telephone user within the State).

CDC examination and other job opportunity bulletins may be accessed through the Department’s Intranet Website: http://intranet/index.html

SPB's Information Center:

General Information:

The SPB maintains a 24-hour recorded telephone information System that allows callers to access a variety of employment and examination information regarding State civil service. In order to utilize this automated system, you must call from a touch tone telephone. If you do not have a touch-tone telephone, you may request information through the mail. All requests for information must include a self-addressed, stamped, No. 10 envelope and should be sent to:

State Personnel Board
P.O. Box 944201
Sacramento, CA 94244-2010
The SPB has information lines in the following areas:

Los Angeles:	(213) 620-6450
San Diego:	(619) 237-6163
San Francisco:	(415) 557-7871
Sacramento:	(916) 445-2689

Examination information for all departments may also be accessed through the Internet at the following Website: http://www.spb.ca.gov.

31170.4.5 Examination Data Inspection

Test questions, books, scoring keys, and written test answer sheets used to test competitors when administering examinations cannot be reviewed under SPB Rules 187 and 190. These items are standardized for use in other examinations.

31170.4.6 Prohibition of Individuals from Influencing the Examination Process

Employees shall not use their personal influence to aid or hinder any applicants with whom they have a family or close personal relationship (i.e., an association with an individual by blood, adoption, marriage, cohabitation, etc.) or a working relationship. This policy is consistent with the Department's existing policy on nepotism.

Note: The April 30, 1992 memorandum, "Preparing for Civil Service Examinations" issued by the Department's PES, outlines the departmental policy regarding preparation for examination process if any competitors are disadvantaged by not having the same access to tutoring, help, and/or aids. The best preparation is the day-to-day guidance and direction received on the job.

Employees shall not:

- Aid or hinder any Applicant in any phase of a civil service examination or hiring process because of such relationship.
- Furnish any person with information intended to improve or injure that person's chances during the application or examination phases.
- Defeat, deceive, or obstruct any other person's right of examination, application, or employment.
- Willfully and falsely mark, grade, estimate, or report upon the examination standing of any person examined or certified.
- Participate in the examination or hiring interview of any person with whom they have such relationships.
- Practice deception or fraud with regard to any person's identity in connection with any examination, application, or request to be examined.
- Obtain examination questions/materials before, during, or after an examination for purpose of preparing candidates for examinations.
- Use unfair means to cause or attempt to cause any eligible candidate to waive any rights under these regulations.

31170.4.7 Conduct of Employees with Family or Personal Relationships with Competitors.

To avoid the appearance of improper influence, employees with a family or personal relationship to any competitor shall not participate in any phase of the examination process, including but not limited to:

- Planning.
- Application review of minimum qualifications.
- Question development.
- Written examination proctor.
- Organizational review committee (ORC).
- Qualifications Appraisal (QAP)
- Serve as a rating or reviewing supervisor of the competitor.
- Participate in discussions or ratings of the competitor.

If an employee serving on an ORC, QAP, or participating in the discussion or rating of competitors finds one of the competitors is one with whom they have a family or close relationship, the employee shall not participate in the interview, observation, discussion, or rating of the competitor by leaving the room.

If serving in any capacity in the examination or hiring process an employee discovers a competitor with whom they have a family or close relationship, the employee shall contact PES for direction.

Employees selected to participate in the State civil service examination process shall maintain the competitive and confidential nature of the examination process. Any appearance of improper influence could jeopardize the integrity of the examination resulting in examination appeals from the candidate group and, ultimately, grounds to void an examination.

Violation of the provisions of this section:

- May result in criminal prosecution.
- Shall be cause for adverse action.

31170.5 CDC Examination Services Sections/Units

CDC Examining Sections/Units are:

- Personnel Examining Section (PES).

- Personnel Examining - Headquarters.
- RTLU.

- Facility Regional/Local Testing Offices (LTO).
- Selection and Standards Branch (See DOM 31060).
  - Officer Recruitment and Selection Section.
  - Testing Centers.
  - Background Investigation Unit (known as BIU).

31170.6 Personnel Examining Section (PES) Examining Role

This section administers CDC's civil service testing programs, exclusive of entry-level peace officer (Officer, CC-I, PA-I and MTA) testing and recruitment. This section conducts major promotional and service-wide open examinations for classifications unique or primary to CDC under the decentralized selection program. Examinations are administered out of the Sacramento PES Headquarters.

31170.6.1 PES Location and Telephone Numbers

Personnel Examining Section
1050 - 20th Street
Sacramento, CA 95814
(916) 322-2694
CALNET 492-2694
TDD Relay Service for the Deaf or Hearing-Impaired: 1-800-735-2922

Should these telephone numbers become obsolete, refer to the California State Telephone Directory or contact the State of California Telephone Operator as indicated in DOM 31170.4.4.

31170.6.2 PES Objective

PES is the central point for CDC promotional and service-wide open examination administration. PES' objective is to ensure examinations are held to provide qualified candidates to fill CDC vacancies statewide.

31170.6.3 PES Oversight

PES oversees the examining for Department and provides, by the RTLU, oversight and assistance to the local testing offices.

31170.6.3.1 PES Headquarters' Responsibilities

- Provide promotional and service-wide open examinations for CDC; identify annual examination needs; develop bulletins and advertise to inform public and CDC employees of upcoming examinations; review applications for minimum qualifications; administer written tests; coordinate and orient qualification appraisal interview panels; provide evaluations of education and experience (E&E); develop eligible lists; and develop necessary test materials with the aid of subject-matter expert consultants including written tests, interview questions, E&E criteria, etc.
- Address SPB concerns on all appeals from applicants/competitors participating in CDC headquarters' examinations. Review, analyze, and recommend either support or denial of appellant claims.
- Process withholds of eligibles from employment lists when examination problems are identified, such as falsification of applications, clerical error resulting in failure of examination, or dismissal from State service.
- Participate in internal audits of regional/local testing offices to identify facilities' or divisions' compliance with the State's civil service merit system laws and rules.

31170.6.3.2 RTLU Examining Role

Provides technical assistance, guidance and training for delegated examinations administered by the facility regional/local testing offices statewide.

31170.6.3.2.1 RTLU Location and Telephone Number

Regional Testing Liaison Unit
1050 - 20th Street
Sacramento, CA 95814
(916) 322-2545 or CALNET 492-2545

If telephone numbers become obsolete, refer to DOM 31170.4.4.

31170.6.3.2.2 RTLU Objective

RTLU is the central point for all facility local/regional testing office requests for technical assistance and training, development of statewide policies and procedures to enhance the regional/local testing concept, and administer examinations primarily for entry-level classifications that are locally recruited, such as instructors, medical personnel, supervising cooks, and trade workers.

31170.6.3.2.3 RTLU Responsibilities

Provide functional oversight and training to Institutional Personnel Officers (IPO) and regional/local testing office staff in examining procedures which include:

- Identifying annual examination needs; developing and distributing examination bulletins; establishing application review standards; administration of written tests, qualification appraisal interview panels and multiple panels (when appropriate); scoring of evaluations of E&E; development of eligible lists; securing confidential test materials; and ensuring the integrity of examinations administered.

The RTLU also performs the following functions:

- Develops guidelines and procedures to enhance the ability of the regional/local testing offices to perform their functions efficiently and in compliance with established standards which govern the State's civil service selection process.
- Participate in internal audits of regional/local testing offices to:
  - Identify a facility's compliance with the State's civil service merit system and areas where additional training is required
  - Provide guidance in the correction of identified problems.
- Address SPB concerns on all appeals from applicants/competitors participating in regional/local testing office examinations. RTLU shall review, analyze, and recommend either support or denial of appellant claims on the part of the regional/local testing offices.
- Process withholds of eligibles from employment lists when examination problems are identified, such as falsification of application, clerical error which erroneously resulted in granting a passing score when in fact the competitor failed the written test; or dismissal from State service which was overlooked during application review or which occurred after completion of the examination.
- Serve as a resource to IPOs and regional/local testing office staff on any delegated testing related issues.
- Provide test guidelines, questions, written test books, E&E criteria, etc., upon request from regional/local testing offices to administer their delegated examinations and meet hiring needs.
- Develop necessary test materials with the aid of subject-matter expert consultants when materials are not available for use by regional/local testing offices.
- Evaluate critical statewide program needs and assist in the development of recommendations for resolution and implementation.
- Assist in the staffing process within regional/local testing offices when requested by IPO.
- Participates in the transition of the delegated testing program responsibility and examination history files from P&CD's NPAU to the local testing offices.

31170.8.1 Facility Regional/LTO Locations and Telephone Numbers

The facilities in **Bold** type indicate regional testing offices.

Avenal State Prison
1 Kings Way
P.O Box 8
Avenal, CA 93204
(559) 386-0587

California Correctional Center
711-045 Center Road
Susanville, CA 96130
P.O. Box 832
Litchfield, CA 96117
(530) 257-2181

California Correctional Institution
24900 Highway 202
P.O. Box 1031
Tehachapi, CA 93581
(661) 822-4402

California Institution for Men
14901 Central Avenue
P.O. Box 128
Chino, CA 91710
(909) 597-1821

California Institution for Women
16756 Chino-Corona Road
Frontera, CA 91720
P.O. Box 6000
Corona, CA 91718
(909) 597-1771

California Medical Facility
1600 California Drive
P.O. Box 2000
Vacaville, CA 95696-2000
(707) 448-6841

California Men's Colony
Highway 1
P.O. Box 8101
San Luis Obispo, CA 93409-8101
(805) 547-7889

California Rehabilitation Center
5th Street and Western
P.O. Box 1841
Norco, CA 91760
(909) 737-2683

California State Prison, Corcoran
4001 King Avenue
P.O. Box 8800
Corcoran, CA 93212-8800
(559) 992-8800

California State Prison, Sacramento
Prison Road
P.O. Box 290010
Represa, CA 95671-0010
(916) 985-8610

California State Prison, San Quentin
San Quentin, CA 94964
(415) 454-1460

Calipatria State Prison
7018 Blair Road
P.O. Box 5001
Calipatria, CA 92233-5001

(760) 348-7000

Central California Women's Facility
23370 Road 22
P.O. Box 1501
Chowchilla, CA 93610-1501
(559) 466-8055

Chuckawalla Valley State Prison
19025 Wiley's Well Road
P.O. Box 2289
Blythe, CA 92226
(760) 922-5300

Correctional Training Facility
Highway 101-N
P.O. Box 686
Soledad, CA 93960-0686
(831) 675-2411

Deuel Vocational Institution
23500 Kasson Road
P.O. Box 400
Tracy, CA 95378-0400
(209) 835-4141

Mule Creek State Prison
4001 Highway 104
P.O. Box 409099
Ione, CA 95640
(209) 247-4911

Northern California Women's Facility
7150 Arch Road
P.O. Box 213006
Stockton, CA 95213-9006
(209) 943-1600

Pelican Bay State Prison
5905 Lake Earl Drive
P.O. Box 7200
Crescent City, CA 95532-7200
(707) 465-1000

Academy
9850 Twin Cities Road
Galt, CA 95632
(209) 744-5000

R. J. Donovan Correctional Facility
480 Alta Road
San Diego, CA 92073-9200
(619) 661-7819

Sierra Conservation Center
5100 O'Byrnes Ferry Road
P.O. Box 497
Jamestown, CA 95327
(209) 984-5291

Parole & Community Services Division
1515 "S" Street – Room 212N
P.O. Box 942883
Sacramento, CA 94283-0001
(916) 323-0283

California State Prison, Los Angeles
44750 60th Street West
Lancaster, CA 93536-7620
(661) 729-2000

California State Prison, Solano
2100 Peabody Road
P.O. Box 4000
Vacaville, CA 95696-4000
(707) 451-0182

California Substance Abuse Treatment Facility-State Prison
900 Quebec Ave.
P.O. Box 7100
Corcoran, CA 93212-7100
(559) 992-7102

Ceninela State Prison
2302 Brown Road
P.O. Box 731
Imperial, CA 92251-0731
(760) 337-7900

Folsom State Prison
Prison Road
P.O. Box 71
Represa, CA 95671
(916) 985-2561

High Desert State Prison
475-750 Rice Canyon Road
Susanville, CA 96127-0750
P.O. Box 400
Standish, CA 96128
(530) 251-5100

Ironwood State Prison
19005 Wiley's Well Road
P.O. Box 2229
Blythe, CA 92226
(760) 921-3000

North Kern State Prison
2737 West Cecil Ave.
P.O. Box 5007
Delano, CA 93216-5007
(805) 721-2345

Pleaseant Valley State Prison
24863 West Jayne Ave.
P.O. Box 8506
Coalinga, CA 93210
(559) 935-4966

Salinas Valley State Prison
31625 Highway 101
P.O. Box 1020
Soledad, CA 93960-1020
(831) 678-5500

Valley State Prison for Women
21633 Avenue 24
P.O. Box 99
Chowchilla, CA 93610-0099
(559) 665-6100

Wasco State Prison-Reception Center
701 Scofield Ave.
P.O. Box 8800
Wasco, CA 93280-8800
(661) 758-8400

31170.8.2 LTO Objective

The LTO's objective is to ensure that examinations are held to provide eligible lists to fill vacancies in the facilities for specific spots and/or regions.

31170.8.3 LTO Responsibilities

Among the LTO's responsibilities are administering delegated examinations for facilities/regions to include distribution of examination bulletin, application review, administration of written tests, coordination and monitoring of qualification appraisal interview panels, scoring of E&Es, and development of eligible lists and examination history files.

31170.9 Personnel Examining Revisions

The Deputy Director, ASD, or designee shall be responsible for ensuring that the contents of this section are kept current and accurate.

31170.10 Personnel Examining References

SPB Laws & Rules

SPB Selection Manual

SPB Technical Selection Memoranda

Delegated Testing Manual

DOM §§ 31010 and 31060.

ARTICLE 18 — GENERAL TRAINING

Revised June 7, 1993

32010.1 Policy

The Department shall establish and maintain a program of employee training in which all employees shall participate to accomplish the mission, goals, and objectives of the Department.

Employee training shall be accomplished according to stated policy and within budgetary restraints.

Training shall be on State time when possible. Compensation for overtime worked for training purposes shall comply with the FLSA.

32010.2 Purpose

This section provides a convenient source of departmentally approved training methods, standards, applications, and establishes procedures for the planning, implementation, and evaluation of all planned training activities.

32010.3 Disclaimer

When provisions of this section are in conflict with the provisions of a Memorandum of Understanding (MOU), the MOU shall be controlling.

32010.4 Goals and Objectives

The goals of departmental training are:

- To ensure that departmental training shall be available to all staff for:
  - The improvement of job performance skills, related knowledges, and abilities.
  - The promotion of safety practices through task efficiency.
- To ensure quality of service by encouraging and facilitating career development planning.
- To emphasize the increased need for effective communications between the Department and the public, between staff and inmates, and staff at all levels within the Department.

The objectives are to:

- Provide training for departmental personnel that shall enable them to function at their optimum performance level.
- Meet all legal and legislative training mandates in a timely and comprehensive manner.
- Provide and maintain QC through coordination and standardization of basic training programs.
- Monitor and evaluate all training programs on the basis of:
  - Support of the overall goals of the Department.
  - Quality of classroom presentation.
  - Applicability to the work place.
  - Improvement of performance/increased productivity.
  - Impact on safety awareness.
  - Overall impact on organization.
- Respond to the expanding, changing needs of the Department by developing new training programs and modifying existing programs to actively meet these needs.
- Improve training practices and procedures through internal management control systems.

32010.5 Definitions

Training

The process whereby Department employees, either individually or in groups, participate in a formalized, structured course of instruction to acquire skills and knowledge for their current or future job performance. These organized activities shall contain measurable learning objectives that can be evaluated in a classroom setting or in structured OJT.

Job-Required Training

Job-required training is designed to assure adequate performance in a current assignment. This includes orientation training made necessary by new assignments or new technology, refresher training, and training mandated by law or other State authority.

Job-Related Training

Job-related training is designed to increase job proficiency or improve performance above the acceptable level of competency established for a specific job assignment. It prepares the employee to assume increased responsibilities in their current assignment.

Upward Mobility Training

Designed to provide career movement opportunity for employees within classifications or job categories designated by the Department as upward mobility classifications. Includes training to facilitate movement of employees from designated classifications into other classifications with increased career opportunities.

Career-Related Training

Designed to assist in the development of career potential and is intended to help provide an opportunity for self-development and achievement of the Department's or State's mission and may be unrelated to a current job assignment.

IST

Any formal training sponsored and conducted by any State agency for the training and development of State employees.

Centralized Training

The scope of the course content covers Department policies, procedures, and State and federal legal issues.

Local or Field Training

Training designed specifically to meet the needs of a particular group, facility, or office and presented directly to local employees.

OJT

Formal training conducted by a supervisor (or a designated employee with the required expertise under the direction of a supervisor) at the job site while the employee is working.

Out-Service Training

Any formal training sponsored and conducted by a non-state agency, the University of California or California State University, and colleges that may be open to the public, as well as State employees. Sponsoring agencies maintain control over the course content for out-service training.

32010.6 Internal Administrative Responsibility

Director

The Director shall:

- Establish the general policy governing departmental training.
- Establish and maintain a DTAC which shall meet on a quarterly and/or ad hoc basis to review the Department's current training programs and make appropriate policy and practice recommendations to support the Department's training efforts.
- Determine the membership of the DTAC. The committee chairperson shall ensure minutes of each meeting are prepared.
- The DTAC will review and make recommendations on departmental training issues. The DTAC will be responsible for ensuring that all appropriate training issues and documentation affecting Officers are referred to the Joint Apprenticeship Committee (JAC) for review.

Deputy Directors

Deputy Directors are responsible for the implementation of all training programs and activities of good quality within their jurisdictions. They shall regularly review the accomplishments and needs of the training programs.

ASD

The Deputy Director, ASD, is responsible for the development, implementation, and funding of departmental training programs and shall provide for and monitor departmental training.

P&CSD

The Deputy Director, P&CSD, in concert with the Assistant Deputy Director and the RPAs, will establish the objectives, policies, and general content for P&CSD training. The overall training objectives (DOM 32010.4) shall focus on those employee skills, abilities, and attitudes that will maximize the carrying out of the parole mission in a safe, efficient, and effective manner.

Wardens

Each Warden shall establish a Training Advisory Committee (TAC) for their facility. The TAC shall meet on a quarterly basis and/or as often as the Warden shall designate and shall advise the Warden in matters relating to training for each respective facility. The Warden shall determine the membership of the TAC. The committee chairperson shall ensure minutes of each meeting are prepared.

RPAs

The RPA is responsible for identifying regional training needs based on an assessment of individual employee needs, operational audits, and supervisor/administrator input and for seeing that such training is provided in a timely and cost effective manner.

Chief-TSB

The Chief-TSB, shall be responsible for:

- The overall management of the departmental training program and ensuring that the Department's training goals and objectives are met within budgetary constraints. Any departmentally required or mandated training not included in this chapter shall be coordinated through the Chief-TSB, prior to any decision or agreement to provide the training. The Chief-TSB, will submit
- recommendations to the Director by the Deputy Director, ASD, on existing and proposed programs, modifications, and all planned training activities conducted by the Department. The Chief-TSB, and staff shall:
- Assess and determine departmental training needs, evaluate and assist in the development and implementation of training programs and development of standardized course content.
- Determine appropriate subjects for centralized training, design, develop, implement, and evaluate centralized training programs with direction from the DTAC.
- Review and make recommendations on the Department's training budget and conduct quarterly audits of training and expenditures allocated to facilities, parole regions, and headquarters' training budgets.
- Provide required training for IST Managers and Assistant Managers.
- Assist the Deputy Directors, Wardens, and RPAs in accomplishing their training goals and objectives.
- Schedule audits of each facility, parole region, and headquarters' training unit to ensure compliance with policy, procedures, and training plans.
- Ensure timely implementation and overall quality of training programs for headquarters' personnel.
- Prepare and distribute to each Warden, RPA, and IST Manager listings of legally or legislatively mandated training.

- Provide direct supervision to the Assistant Chief-TSB, and the administrator of the Academy .
- Provide indirect supervision for facility IST Managers.

TSB

The Assistant Chief-TSB, supervises staff assigned to the TSB who carry out specific training analysis; plan, design, and implement training; and perform audits of IST budgets as directed by the Assistant Chief and approved by the Chief.

The unit has the broad responsibility of ensuring that scheduled training programs are delivered on a planned basis.

IST Managers and Assistant Managers

Facility IST Managers and their assistants shall:

- Report directly to the Warden or to the Chief Deputy Warden as designated by the Warden.
- Develop and follow a local training plan.
- Develop and implement formalized classroom instruction or OJT to meet local operational needs, legal requirements, and individual employee job performance needs.
- Provide the resources and services necessary to ensure that planned training is implemented in a professional, effective, and cost-efficient manner.
- Maintain required training records and files.
- Submit required reports within established deadlines.
- Ensure that part-time instructors receive required training.
- Monitor the quality of instruction.
- Ensure that training resources are used only for authorized purposes.
- Serve as vice chairperson of the local TAC.
- Serve as the chairperson of the Local Apprenticeship Subcommittee (LAS) and shall:
  - Conduct meetings and submit minutes of the meetings to the JAC using CDC Form 1787, Apprenticeship Enrollment Detail , and typing format, LAS Minutes.
  - Maintain apprenticeship agreements for all apprentices currently enrolled.
  - Enroll newly appointed Officers who are not enrolled at a Basic Academy into the CPOAP.
  - Provide training as needed to new apprentices, supervisors, and managers in the operation/administration of the CPOAP.
  - Review progress of the Local Apprenticeship Program

P&CSD/Divisional Training Coordinator

The Divisional Training Coordinator (DTC) shall:

- Ensure that all training mandated by law, departmental, or divisional policy is provided to appropriate staff in the division.
- Ensure necessary resources and technical assistance are provided to the regions to carry out such mandated training programs.
- Be a conduit to the Chief-TSB, for the submission of annual training plans, audits, necessary reports, and to request technical and fiscal assistance when required.

Parole Regional Training Coordinator

The Regional Training Coordinator shall:

- Carry out regional training programs mandated by the RPA or divisional training mandated by the Deputy Director.
- Provide technical assistance to the unit supervisor in conducting unit training.
- Ensure that approved out-service training is provided to individual employees.
- Serve as the chairperson of the regional LAS.
- Be at the PA-II level.
- Work under the direction of the RPA.

Parole Unit Supervisor

The unit supervisor shall:

- Assess the training needs of both the unit as a whole and for individual employees assigned to the unit.
- See that these training needs are communicated to the RTC and are met through regularly scheduled unit training.

Headquarters' IST Training Officer

Under the supervision of the Assistant Chief-TSB, one member of the TSB shall be assigned as training coordinator for headquarters' employees. The term "headquarters" includes all other satellite offices and field offices administered centrally from Sacramento.

The headquarters' IST Officer shall:

- Develop and present orientation materials and classes for new headquarters' employees.
- Coordinate both the in-service and out-service training activities of headquarters' employees.
- Maintain training records on employees within the scope of their responsibility.

- Assess headquarters training needs with assistance of a TAC. The composition of this committee shall be approved by the Chief Deputy Director and the Chief-TSB.
- Develop an annual training plan that is approved by the Chief Deputy Director and the Chief-TSB.

Managers/Supervisors

All managers/supervisors shall:

- Assess training needs of their subordinates in meeting identified training needs.
- Provide subordinates with formalized OJT that is structured for improvement in areas where job performance deficiencies exist and/or to provide the acquisition of new knowledge or skills.
- Develop a CDC Form 909, Annual Training Agreement for permanent employees and employees on promotional probation to fulfill the operational training requirements of the Department and meet the developmental needs of the employee. Under the provisions of FLSASection785.28, managers/supervisors, when preparing annual training agreements (ATA), are expressly forbidden from making formal or informal recommendations to subordinates to enroll in college classes to get Associate or Bachelor's degree or from making any statement that would cause the subordinate, at the initiation of the manager/supervisor, to take such actions.
- Prepare probationary and annual performance evaluations that include a report of the employee's completed training hours, achievements, efforts, and needs.

Evaluations shall be rated to provide consistency and inform employees of the standards expected. The evaluation rating excludes Basic Academy, and PC 832 training.

The evaluation of training participation shall include, but not be limited to, the following:

- The employee's attendance at classes noted in the ATA that were, in fact, offered by IST during that period of performance.
- Additional participation sufficient to fulfill the employee's minimum required hours of training.

Employees

Individual employees shall:

- Attend all training identified and required by their immediate supervisor or IST Manager.
- In conjunction with their supervisor, fill out a CDC Form 909.

32010.6.1 External Administrative Responsibility

The Robert Presley Institute of Corrections Research and Training was created by legislation that was signed by the Governor in 1986 (Chapter 3.5, Title 7 of part 3 of PC).

Presley Institute

In the legislation (PC 5092), a specific task was given to the Institute. The Institute is to develop a detailed program for implementation by the Legislature, CDC, and the CYA. The purpose of the program is to establish a career path to be integrated with the educational process for all youth and adult State corrections' personnel in California. The overall goal is to improve the job and career competence of State youth and adult corrections' personnel. One method of achieving this goal is to encourage the attainment of post secondary educational degrees. Another method is to establish minimum selection, training, and educational standards for entry or promotion into CDC and CYA positions including entry-level through management and specialized positions.

Joint Apprenticeship Committee (JAC)

The JAC, in consultation with the Presley Institute, shall research, establish, and monitor standards for the training of Officer Apprentices. The committee is comprised of voting members representing CDC and CYA management and the California Correctional Peace Officers Association. Nonvoting membership includes representatives from the California DIR, DAS, the community colleges, legal advisor, and staff from the Department's training programs.

The JAC, in consultation with the Presley Institute, shall develop standards for Advanced Officers' training and supervisory training curriculum, which is to be completed as a prerequisite to passage of probation.

32010.7 Use of Training Resources

The departmental training resources shall be allocated in the following priority order:

- Job-required training.
- Job-related training.
- Upward-mobility training.
- Career-related training.

32010.7.1 Types of Training Resources

Revised February 21, 1995

Available training resources are:

- IST courses or activities that are:
  - Designed and administered by the Department or other state departments individually or in joint agreement.
  - Offered by the DPA and the State Training Center.
  - Designed or contracted exclusively for the State by private consultants or firms, other nonstate agencies and colleges or universities other than the University of California or the California State University and colleges.
- Centralized training courses covering the basics that serve as a foundation for specialized local or field training. Course participants may need to meet at a specified site away from their facility/parole region or instructors may provide training on-site at the facility if it is determined to be more cost effective. When close course control is required, whether by law or departmental policy, centralized training is the method most used to ensure accountability. By setting and monitoring training standards, the TSB ensures that departmental training needs are met in an effective, consistent, and timely manner.

Local or Field Training

IST designed specifically to meet the needs of a particular group, facility, or office and presented directly to local employees is an example of local or field training. Generally, local or field training is only appropriate for the specific on-site group being trained and would not apply or be appropriate for similar groups employed by different facilities, regions, units, etc. Geography, construction, program, and inmates/parolees are the main factors that limit the use of local training as a centralized departmental training tool. Local or field training is generally delivered to the employee at the job site.

Out-Service Training

Out-service training includes courses or activities:

- Offered through accredited colleges or universities.
- Conducted by private consultants, firms, or other nonstate agencies.

Employees participating in out-service training may submit requests to the IST Manager for consideration of credit application toward their annual training requirements in the following manner:

- Requests shall be accompanied by a document verifying satisfactory completion of the training.
- Employees may receive credit for out-service training on an hour-for-hour basis.
- The training shall be clearly labeled out-service training on the employee's training record.
- Participation in out-service training cannot be substituted for incomplete participation of mandated training as specified in DOM 32010.14.
- Crediting an employee's training record for voluntary participation in out-service training shall not be considered authorization or approval for payment for participation in the training, either as working time or for related expenses incurred by the employee.

Out-service training for the purpose of meeting departmental needs for scientific, technical, professional, and management skills shall be evaluated/processed as follows:

- Training shall be necessary and of direct value to the Department and relevant to the employee's general field of work.
- Training shall provide knowledge and skills that cannot be acquired through available IST as defined in this chapter (exclusive of specialized training).
- Training that covers subject matter not sufficiently or recently encompassed in the employee's previous education/experience or of which the employee would not normally be expected to know prior to their present position.
- Does not include institutes, conferences, and conventions except for those recognized as legitimate training programs by the DPA and the Chief-TSB.

Generally, the needs of the Department are categorized as follows:

- New development. This includes:
  - Technological, social, or economical changes making new or increased skills or knowledge necessary to operate the Department.
  - Technological or scientific advancement which would materially aid in improving departmental operations.
- Personnel development. This includes new or improved skills, knowledge, or attitudes required for:
  - More efficient work at present job.
  - Personal development of key employees or their replacements.

Reimbursement

The employee, or their estate, may be reimbursed for all expenses of related travel, tuition, supplies or other fees if an assignment is terminated prior to completion, either:

- At the convenience of the State, provided the training facility reports satisfactory performance by the employee in the prescribed course of study during the assignment.
- Because of death, prolonged illness, disability, or similar event determined by the Warden or Chief-TSB, to be beyond the control of the employee.

Job-Required Reimbursement

All necessary expenses such as time-off, course required books and materials, back up, overtime, travel, per diem, and tuition.

Job-Related Reimbursement

Up to 100 percent of all necessary expenses such as time-off, required books and materials, back up, overtime, travel, per diem, and tuition.

Upward Mobility Reimbursement

Up to 100 percent for necessary expenses such as time-off, tuition, and required books. Overtime, back up, travel, and per diem are not paid. Maximum expenses shall not exceed $300 per person per year. All expenditures or reimbursements paid in this category may be reported by the Department as taxable income.

Career-Related Reimbursement

For career-related out-service training, college attendance, or IST conducted outside the Department up to 50 percent of tuition and required books shall not exceed a maximum of $200 per year per person. Travel, per diem, and any other expenses are not paid. State time will also not be granted, i.e. the employee shall attend such training on his or her own time. All expenditures or reimbursements paid in this category may be reported by the Department as taxable income.

For career-related training conducted by CDC, time may be granted but no other expenses are allowable. Attendance at such training may not cause the Department to incur overtime and/or backup costs.

College Attendance

College attendance will normally be considered as either upward mobility or career-related training.

To be considered for possible reimbursement, all college attendance shall be approved in advance by a Warden, RPA, or Deputy Director.

Reimbursements shall be made only upon submission of proof of successful completion of the class. Successful completion is defined as a grade of "C" or better.

Dollar reimbursements shall be made in accordance with the guidelines pertaining to the category of training for which college attendance was approved. However, tuition reimbursement may not exceed that charged by the California State University or Community College systems unless the class is job required and it can be demonstrated that the same or similar class is not offered by either a California State University campus or a community college.

Only job-required college classes may be attended on State time. All other categories, including job-related would not qualify for release time, i.e. the employee shall attend the class on their own time. Altered work schedules are encouraged where possible.

Authorization

Requests for out-service training shall be forwarded in a timely manner as follows:

- Facilities, to the Warden.
- Headquarters, to the Chief-TSB, who, if authorizing the assignment, shall establish conditions governing the reimbursement of related expenses.
- P&CSD, to the RPA.

32010.8 Training Program Standards

All full-time training employees shall be qualified supervisors/managers who follow a specific training plan that is reviewed annually.

32010.8.1 Training Personnel

All facility IST Manager positions shall be filled on a permanent basis by a staff member at a second-line supervisory classification such as a Lieutenant, unless otherwise approved by the Deputy Director, ASD. The Chief-TSB, may recommend Training and Development (T&D) assignments subject to the approval of the Deputy Director, ASD. The Chief-TSB, shall be available to assist Wardens in the selection of new IST Managers and shall be consulted prior to appointing new training managers.

Assistant Training Managers, where authorized, shall be appointed from the rank of Sergeant.

Training manager positions within the P&CSD shall be appointed from the rank of PA-II.

Advanced training instructors based at the Academy and at the TSB shall be appointed from the rank of Training Officer I or comparable rank, when recommended by the Chief-TSB, and approved by the Deputy Director, ASD.

The Headquarters' Training Officer shall be appointed from the rank of Training Officer I, assigned to the TSB.

Part-time instructors may be selected from staff at any job classification or level. Personnel utilized as IST instructors shall have either:

- A teaching credential.
- Completed a specialized training course for part-time trainers (e.g., Training-For-Trainers [T-4-T]) that provided a minimum of 24-hours instruction. The lesson plan shall be approved by the TSB prior to conducting the training course.

Part-time instructors shall provide a brief resume to be maintained locally, showing subject matter expertise, certification, or qualifying T-4-T course completion.

Under special circumstances, monitored by the IST Managers, "subject matter experts" may be used to assist in presentation of training.

32010.8.2 First Year Training

All full-time departmental training personnel shall receive, at a minimum, 40-hours of combined formalized classroom and OJT during their first year of assignment in the following areas:

- Designing and developing training courses and classes using task analysis, measurable objectives, preparation of lesson plans, test construction, and sequence of course instruction.
- Selecting and effectively using audio-visual materials.
- Conducting actual classes using a variety of training, testing, and evaluation methods.
- Use and maintenance of mandatory and optional training record forms.
- Managing training costs and budget analysis.

If the employee can provide certification of applicable training received prior to this assignment, the employee may not be required to repeat that training, at the discretion of the Chief-TSB.

32010.8.3 Local Training Plan

Each IST office shall develop an annual training plan. The plan shall include, but not be limited to, all planned training courses listing specific hours for each course, number of participants, and projected costs. The training courses included in the plan shall reflect:

- Basic job required/related curriculum training requirements.
- Recent or significant changes in policy or program.
- Review and analysis of incidents or procedures which indicate specific training deficiencies.
- Recommendations from supervisors/managers to correct performance deficiencies.
- ATAs and individual employee training plans (see DOM 32010.15) within local budgetary constraints. This annual training plan shall be submitted to the Chief-TSB, by April1 for the following fiscal year.

32010.8.4 In—Service Training (IST) Course Content

A course outline or lesson plan is required for all classes. When standardized lesson plans exist for departmental core subject material, they shall be used.

Training managers are allowed the flexibility to diversify or consolidate training subjects and programs within established departmental requirements to meet facility/parole region needs and/or budget limitations. A copy of all locally developed lesson plans shall be maintained on file at the local training office. Lesson plans shall be forwarded to the TSB for review upon request.

All training classes shall include a valid, measurable method of testing knowledge or proficiency gained through the training. This instrument shall demonstrate the scope of the material presented and job applicability.

32010.8.5 Record Keeping Forms

The following forms shall be used to record training activities, data, and budgetary items:

- CDC Form 843, Training Record and Instruction Sheet. Use of this form or the departmentally offered computer program for IST is mandatory; completed and maintained locally.
- CDC Form 844, In/Out-Service Training Participation Sign-In Sheet .
- CDC Form 845, Monthly Training Report .
- CDC Form 845-A, Completed IST Report. Use is mandatory. Complete and forwarded to the TSB by the tenth of the following month.
- CDC Form 845-B, Training Participant Data Sheet . Use is required. If all information is maintained on a computer program, retention of the form is not necessary.
- CDC Form 845-C, Completed Out-Service Training Expenditure Report . Use is mandatory. Complete and forwarded to the TSB by the tenth of the following month.
- CDC Form 846, Completed Centralized Training Expenditure Report .
- CDC Form 854, Employee Training Request . Use is mandatory for all headquarters' staff requesting training. This form shall be completed and forwarded to the Chief-TSB, for review/approval.
- CDC Form 907, OJT Documentation . The CDC Form 907, or other locally approved format for recording OJT, shall be used if credit is given for the training.
- CDC Form 908, Training Referral . The front side of the form is to be filled out by the employee's supervisor and sent to the local training office for completion of the reverse side of form. The original and three copies are then distributed as directed on the bottom of reverse side.
- A CDC Form 909 shall be used for developing a formal ATA for an employee.

32010.8.6 Class Records

For each training activity conducted, the following records shall be maintained:

- CDC Form 844 (with the exception of OJT).
- An approved lesson plan.
- A record of score achieved through a written test or performance demonstration of the learned skill (with the exception of OJT). This score shall be recorded on the CDC Form 844 by the class instructor.
- DAS Form 103-A, Apprentice Daily Record . Use is mandatory for all Officer Apprentices.
- The LAS shall meet regularly, at least quarterly, or more often as deemed necessary. The minutes of the meeting shall be completed and submitted to the JAC by the Apprenticeship Program Coordinator by the tenth of the following month.

32010.9 Fiscal Management

Annually, the Chief-TSB, shall submit a departmental training plan to the Chief Deputy Director for approval.

Allocation of Funds

The Chief-TSB, subject to the approval of the Deputy Director, ASD, shall:

- Allocate training funds to the facilities and parole regions on an equitable basis according to identified needs and approved local training plans. This allocation shall be made annually and shall be subject to review and redistribution in the event that any facility or parole region fails to use the total allocated funds or does not use the funds as specified by departmental policy.

Centralized Training Funds

- Annually allocate to facilities funds identified for centralized training.

32010.9.1 Use of IST Funds

Local IST funds may be used only for training as defined in DOM 32010.5. Routine staff meetings and recruitment activities are not considered training activities. A staff meeting that meets the conditions and mandates of this section may be considered training.

Attendance at lectures, meetings, training programs, and similar activities need not be counted as working time if the following four criteria are met:

- Attendance is outside the employee's regular working hours.
- Attendance is, in fact, voluntary.
- The activity is not directly related to the employee's job.
- The employee does not perform any productive work during such attendance (reference FLSA, Section 785.27).

32010.9.2 Reporting Responsibilities

Each facility shall complete a CDC Form 845 and forward it to the Chief-TSB, by the tenth day of the month for the preceding month. Parole regions shall complete and forward reports quarterly to the DTC.

Each facility shall complete a CDC Form 846 and forward it to the Chief-TSB, by the tenth day of the month for the preceding month.

32010.9.3 Audits

The Chief-TSB, or designee shall order and/or conduct periodic audits of all training operations within the scope of their responsibility.

Wardens, RPAs, IST Managers, and the Headquarters' Training Officer shall be provided with a list of the dates when regular audits are to be conducted.

Copies of the audit format shall accompany each auditing schedule.

Budgetary Assistance

The appropriate training officer within the TSB shall provide fiscal/budgetary assistance as requested by facility and Regional Training Managers.

32010.10 Training Requirements

Training of employees shall be done during regular work hours, when possible, or on the employees' off-duty hours when necessary. Compensation for training shall comply with existing policies, law, and MOUs. Within budgetary constraints, the required training shall be provided by the Department and accomplished by the employee.

It is a condition of employment that all employees complete the training required for their job classification/position. Employees who fail to meet these training requirements may have their merit salary award denied or be subject to other administrative sanctions.

Employees shall receive a minimum of eight hours of formal classroom instruction annually. The remaining hours of training required by the employee's job classification may be formal IST, out-service training or OJT, or any combination thereof. (See DOM 32010.13.)

32010.10.1 Orientation of Employees

All employees new to the Department, regardless of job classification, shall receive a minimum of 40 hours of orientation training. It is intended the orientation training be provided prior to job assignment but shall be provided within 30 days of appointment. Orientation is required in addition to other training requirements. Every new employee should be provided with a copy of "The Great State! Employee Handbook."

Orientation shall include an introduction to:

- The CCR.
- Departmental policies.
- Organizational structure.
- Facility/region policies.
- Emergency plans/procedures.
- Fire reporting procedures and fire safety.
- IPA.
- Inmate work incentive.
- The employee's training requirements and responsibilities, including the apprenticeship program.
- Affirmative Action/EEO.
- Sexual orientation discrimination prevention.
- Sexual harassment prevention.
- Use of force.
- Employee rights, benefits, and responsibilities.
- Employee Workers Compensation benefits.
- Firearms policy.
- Ethics and professionalism.
- EAP.
- Community relations.
- Stress reduction.
- AIDS.
- Inmate staff/relations.
- Accident prevention.
- Other subjects as deemed appropriate by the local administrators.

32010.10.2 Supervisory Orientation

In addition to subjects listed above, orientation for new supervisors shall include:

- Management team concepts.
- Supervisor's role in training, including the apprenticeship program.
- Preparing performance appraisals/ATAs.
- Employee discipline.
- Handling employee grievances.
- Inmate appeals process.
- Report writing.
- FLSA.
- Inmate disciplinary process.
- Communications skills.
- Other subjects as deemed appropriate by local administrators.

Upon completion of the classroom orientation, the employee shall be assigned to the appropriate supervisor for OJT. The supervisor shall conduct formalized OJT to complete the employee's 40-hour orientation.

If the employee can provide certification of orientation training in applicable areas received prior to employment, they shall not be required to repeat that training unless required by law.

Each facility/parole region shall determine and establish an orientation for employees who are not new to the Department but have transferred or promoted to the facility/parole region.

32010.11 Methods of Training and Documentation

OJT

OJT is provided to employees in either a classroom or work setting to ensure acceptable levels of performance and knowledge, and to correct problems.

Upon completion, the supervisor is to record the training on a CDC Form 907 or other locally approved recording format. The employee and supervisor retain a copy and forward the original to the training manager to credit the employee's training record. The CDC Form 907 need not be retained by the training manager after the training has been properly posted to the employee's training record.

When appropriate, IST managers are encouraged to fully utilize this type of training as opposed to off-site training or on-site training that does not fall within the trainee's regular work hours. Full utilization of this method will assist the manager in the reduction of FLSA expenditures and allow more productive use of limited budgetary resources.

On-Site Formal Training

Any locally presented training activity, on-site formal instruction, seminars, and workshops for which training credit is to be given shall be recorded on a CDC Form 844.

Employees shall complete the required information and the instructor shall enter test scores and ensure that the completed forms are received by the training manager.

Training managers shall credit each attending employee's training record and retain CDC Form 844 for one year.

Off-Site Training

Employees shall arrange with the training manager appropriate certification of any instruction, seminar, or workshop presented away from the employee's place of work for which training credit is to be allowed.

Upon receipt of the arranged certification, the training manager shall credit the employee's training record. A copy of the Certificate of Completion shall be placed in the employee's training file.

32010.12 Probationary Employees

Entry-level, probationary employees of the Department shall complete the training requirements of their job classification before the end of their probationary period, or earlier, as specified. An employee who provides acceptable certification of having previously completed a requirement shall receive credit and not be required to repeat the training. Employees who fail to complete any portion of required training may be rejected on probation. Probationary employees are required to receive orientation training in addition to the requirements for certain job classifications listed below.

Correctional Employees

Clerical, medical, non-sworn, and peace officer staff shall complete the correctional employee's component program during probation.

MTAs

MTAs shall complete:

- The requirements of PC 832 and chemical agents training as provided at the Academy within 90 days of appointment and prior to performing peace officer duties.
- The MTA Apprenticeship Program (3600 hours within two years).

Correctional Counselors

Correctional counselor staff shall complete:

- The requirements of PC 832 and chemical agents training as provided at the Academy within 90 days of appointment and prior to performing peace officer duties.
- The Casework Training Component Program within six months.
- The CC-I Apprenticeship Program (3600 hours within two years).

Firefighters

Firefighter personnel shall be trained in accordance with DOM 52090.6. In addition, training shall include:

- The requirements of PC 832 and chemical agents training as provided at the Academy within 90 days of appointment and prior to performing peace officer duties.
- The Firefighter Apprenticeship Program (3600 hours within twoyears).

Officers

Officers shall complete:

- The Basic Academy prior to assignment as a Officer.
- The Correctional Employee Component Program within sixmonths of appointment as an Officer.
- The CPOAP (3600 hours within two years).

Employees shall receive 36 hours of OJT credit for successful completion of the appropriate component program.

Non-entry-level, probationary employees shall complete one-half of their annually required training to successfully complete probation.

32010.13 Non-probationary Employees

All employees shall receive 40 hours training annually, at least eight hours of which shall be formal classroom training. The balance can be any combination of OJT, formal IST, or out-service training.

32010.14 Required Training Subjects

All departmental employees shall attend training as follows:

- Emergency plan training shall include fire, earthquake, bomb threat, evacuation, and other emergencies. Initial instruction required during orientation. Refresher training only upon approval of a CDC Form 909.
- Fire safety training shall include use of fire extinguishers, recognizing fire hazards, proper reporting methods, and evacuation procedures (DOM 52090.6.1). Initial training during orientation, annual refresher through OJT.
- General training regarding the policies and procedures to be followed to ensure compliance with the IPA per DOM 13030. Initial instruction is required during orientation. Refresher training only upon approval of an ATA.
- Sexual harassment prevention--initial instruction during orientation. Refresher training required only upon approval of an ATA. Taught only by departmentally approved instructors with departmental lesson plan. One hour minimum.
- Sexual orientation discrimination prevention--initial training during orientation. Refresher training required only upon approval of an ATA. Taught only by departmentally approved instructors with departmental lesson plan. One hour minimum (may be combined with sexual harassment prevention for minimum of two hours).
- Accident prevention--initial training required during orientation per CCR (8) 3203, General Industry Safety Order (GISO). Refresher training only upon approval of an ATA.
- AIDS--initial training during orientation. Annual updates may be by distribution of updated literature made available to staff through IST. Refresher training by approval of an ATA.
- All classes specified on the employee's ATA.

32010.14.1 Employees Supervising/Contact With Inmates

All employees who supervise or have frequent contact with inmates shall receive the following training:

- Work incentive program/inmate time cards--initial training during orientation. Refresher/updates as necessary by approved ATA.
- Inmate/staff relations–initial training during orientation. Refresher/updates as necessary by approved ATA.
- Escape prevention/pursuit–annually.
- Disturbance control–annually per DOM 55010.

32010.14.2 Peace Officer Classifications

Peace officer classifications shall receive training as follows:

- Firearms requalification–check reference for specific information (PC 830.5d). (See DOM 32010.19.3 through 32010.19.9.)
- Chemical agents–shall complete a course in the use of chemical agents per PC 12403. This course is provided in PC 832 class at the Academy. Refresher training only by approved ATA.
- Use of force–initial training required during orientation. Follow-up training as deemed necessary by approved ATA.
- Stress reduction–provided during orientation for peace officers in handling of stress associated with their duties per PC13601. Refresher training as necessary by approved ATA.

Officers, Sergeants, Lieutenants, and Captains

Officer, Sergeant, Lieutenant, and Captain training shall include:

- Basic Academy--six weeks of training as provided by the Academy. This course of study complies with requirements contained in PC 832 and PC 12403. Employees shall successfully complete this training only once unless they experience a significant break in service. Each case involving a break in service shall be reviewed individually by the hiring authority in consultation with the Chief, Selection and Standards Branch.
- Less than lethal weapons--personnel authorized pursuant to DOM 55050.18 shall receive initial training and biannual recertification with the taser. Initial training and annual recertification shall be given for the sidehandle baton. Training is only for those employees designated to use or authorize use of these weapons (DOM 32010.19.10). To be taught by departmentally approved instructors only utilizing a departmentally approved lesson plan.
- Sergeant, Lieutenant, and Captain academies each consist of 40 hours of training provided by the Academy. All Sergeants and Lieutenants are required to complete their appropriate academy as required through PC 13601 prior to successful completion of probation.

P&CSD

Parole agents shall successfully complete a four-week Parole Agent Academy that includes PC 832 and PC 12403 requirements prior to permanent assignment to a parole unit.

Parole agents shall complete the Parole Agent Apprenticeship Program (3600 hours within two years).

All Parole Agents and Officers assigned to the P&CSD shall comply with weapons requalification as stated in DOM 32010.18 through 32010.18.10. In addition, those who are armed shall fire a night (diminished light) course annually for familiarization and training (not qualification).

All Parole Agents and Officers assigned to the P&CSD shall receive quarterly refresher training in self-defense/defensive tactics.

32010.14.3 Supervisors

Supervisor training shall include:

- All first-line supervisors shall attend Basic Supervision, a departmentally approved course of instruction. Peace officer classifications shall complete this course of training as a prerequisite to successful passage of probation. All other classifications shall complete this course within their probation period. This training complies with requirements contained in GC 19995.4 (DPA Law 19995.4 and PC 13601).

- All first-line supervisors shall complete 40 hours of OJT or classroom instruction in supervisory training during probation (DPA Law 19995.4).
- All second-line supervisors shall attend Advanced Supervision, an approved 40-hour course, within the first year following appointment. This course is a prerequisite to successful passage of probation for peace officer classifications (PC 13601).
- Labor relations annual updates as provided by the Department's Labor Relations Office and/or facility EROs.

32010.14.4 Managers

Training shall include:

- Management Training Program--a 120-hour course of instruction provided by TSB. Meets PC 13601 requirements for peace officer classifications.
- Nonpeace officer managers shall successfully complete the requirement of PC 832 and chemical agents training as provided by the Academy prior to assuming Administrative Officer-of-the-Day (AOD) duties.
- Labor relations annual updates as provided by the Department's Labor Relations Office and/or facility EROs.
- Conflict Management training for facility and parole managers.

32010.14.5 Special Unit Staff

All peace officer employees regularly assigned to work with inmates in Disciplinary Detention (DD), Administrative Segregation (AD-SEG), SHU, Protective Housing Units (PHU), or with "special needs inmates" shall receive additional training in the below-listed subjects with initial training following assignment to the unit and follow-up training as required by approved ATA. OJT in these subjects should be utilized whenever possible:

- Classification levels and process.
- Cell and body searches.
- Application of restraint gear.
- Drug identification and control.
- Crime scene preservation.
- Prison gangs.
- First-aid and cardiopulmonary resuscitation (CPR).
- Identification of special problem inmates.
- Less than lethal weapons certification and biannual refresher training for the taser and annual refresher training for the sidehandle baton for those employees designated to use or authorize the use of these weapons.
- Use and care of protective vests.
- Use of other specialized equipment or devices as applicable.

32010.14.6 Senior Hearing Officer

Senior hearing officers shall receive initial training prior to assuming responsibilities of conducting hearings for CDC Form 115-A, Serious Rules Violation Report, certified by the local Chief Disciplinary Officer. (See DOM 52080.) Refresher training is required only upon approved ATA.

32010.14.7 Hearing Officer

Hearing officers shall receive initial training prior to assuming responsibilities of conducting hearings for CDC Form 115, Rules Violation Report, and shall be certified by the local Chief Disciplinary Officer. (See DOM 52080.) Refresher training is required only upon approved ATA.

32010.14.8 Investigating Employee/Staff Assistant

Employees assigned as an investigating employee/staff assistant shall receive initial training and be certified by the local Chief Disciplinary Officer prior to assignment. (See DOM 52080.) Refresher training is required only upon approved ATA.

32010.14.9 Miscellaneous Required Training

Special Emergency Response Team (SERT) members shall receive special emergency response training.

Negotiation Management Team members shall receive negotiation management training.

Employees who frequently drive on State business shall receive defensive driver training.

Safety coordinators shall receive a 120-hour course on basic safety training provided by DGS, SAM 2580.2, within 12 months of appointment.

Staff assigned to areas where exposure to hazardous substances is possible shall receive material safety training prior to assignment (SAM 2590.2 and GISO Section 5194).

Records Management Personnel

Records management personnel shall receive training in records management (SAM Section 1610 and GC Sections 14740 through14774).

California Law Enforcement Telecommunication System (CLETS)

All employees assigned to operate CLETS terminals and/or interpret printouts shall receive CLETS training as required by State DOJ as follows:

- Initial training when assigned.
- Follow-up training as approved by ATA.

32010.15 Job-Related Subjects

In addition to required subjects, the Department's training program includes, but is not limited to, the following job-related subjects:

- Key and tool control.
- Handling hostile and threatening behavior.

- Inmate rules and regulations.
- Supervision of inmates.
- Cell and body searches.
- Collection and preservation of evidence.
- Prison gangs.
- Supervision of housing units.
- Employee safety.
- Disciplinary reports and procedures.
- Staff-inmate relations.
- Crime scene preservation.
- Armed post conduct and responsibility.
- Application of restraint gear.
- Problems of new correctional employees.
- Gate operations.
- Ground and yard control.
- Self defense.
- Rights and responsibilities of inmates.
- Transportation of inmates.
- Dining room procedures.
- First-aid and CPR.
- Classification levels and procedures.
- Ethics.
- Radio procedures.
- Searching visitors.
- Employee performance evaluation.
- Departmental policy and procedures.
- Drug identification and control.
- EAP.
- Rape assault prevention.
- Timekeeping and post assignment.
- Inmate property.
- Identification of inmates with special problems.
- Use of C-File.
- Interpersonal relationships (communications).
- Time management.
- Count procedures.
- Courtroom demeanor.
- Interviewing techniques.
- Preparation of budget requests.
- Emergency alarm procedures.
- Functions of Special Service Unit.
- Casework management.
- FAX operations.
- Inmate prerelease.
- Canteen procedures.
- Food and sanitation.
- Records office functions.

This list is not all-inclusive. Other subjects are developed and presented as needs are identified.

Employees shall refer to various MOUs for additional training requirements and listing of courses to be given "high priority" consideration.

32010.16 Individual Training Plan

The Standard Form 637, Individual Development Plan, is part of the annual employee appraisal process and identifies the employee's training and development goals for the following year. The specific training requested will be provided in accordance with departmental, facility, and regional priorities and resources. The supervisor's acceptance of these goals acknowledges the employee's intent but does not constitute a mandate.

32010.16.1 Annual Training Agreement

An ATA for all permanent employees, including those on promotional probation, shall be prepared jointly by the employee and their supervisor.

The ATA shall specify the required subjects and additional subjects necessary to meet the employee's training needs for at least the minimum of eight hours. In some instances, more than eight hours may be required.

The ATA shall be reviewed by the second-line supervisor, approved by the training manager, and retained in the employee's file until expired or completion of the employee's next performance evaluation, whichever is later.

Any subject listed on the employee's approved ATA becomes required training. The ATA is not approved until signed by the IST Manager.

32010.16.2 Training Referral

A CDC Form 908 is the means for a supervisor to request special training for an employee whose training needs cannot be met with OJT and is not currently being met or is not required by the employee's ATA.

Referrals shall be used to designate specific subject matter needed to correct performance deficiency.

The immediate supervisor shall initiate the referral upon identifying a training need of the employee that cannot be met by OJT.

The referral shall be reviewed by the second-line supervisor and forwarded to the training manager for approval.

When approved, the training then becomes required of the employee and the referral shall be retained in the employee's training file until their next performance evaluation.

32010.16.3 Special Training

Other special training may be required to meet Department or facility/parole region needs as determined by the Director, Warden, or RPA.

32010.17 Employee Development

Employee development programs are planned training activities designed to increase and broaden the knowledge, experience, and skills of self-motivated, career-oriented employees.

Employee development programs shall emphasize activities that will accelerate the employee's present job efficiency and/or provide developmental career paths that meet both the employee and departmental needs. This shall be accomplished through job required, job related, upward mobility, or career-related training and may be conducted as in-service, out-service, or OJT.

All approved employee development programs shall be evaluated at least once annually to determine whether the specific program components are producing the positive changes sought in the knowledge, skills and abilities of the participants. This evaluation shall aid the training manager in planning new programs and where indicated, modifying existing programs.

32010.17.1 Employee Development Methods

Methods available for providing employee development programs within the Department include:

- Systematic coaching and task delegation by the supervisor.
- Serving in a higher classification in an acting capacity.
- Planned rotation; providing experience in different and/or difficult jobs.
- Committee assignments and public speaking duties.
- Special projects and task force assignments.
- Workshops and seminars.
- Appropriate writing assignments.

Methods available outside the Department include:

- Special evening classes.
- Selected workshops, institutes, and seminars.
- Membership and service in professional organizations.
- Community service experience.

32010.17.2 Staff Development

The Department's career development program was established to formalize strategy to achieve chosen career goals. The program is primarily administered by the TSB with assistance from the HRS. The TSB is committed to career development and shall provide services and direction to accomplish the goals of the program.

T&D assignments are utilized by the Department as one method to assist in staff development. For a full discussion of this process refer to DOM 31060.6.5.

32010.17.3 Supervisor Development

Programs for development of supervisors shall contain, at a minimum, the following:

- Supervision theories and practices.
- Problem solving and the decision-making process.
- Labor/employee relations.
- Staff development/training and performance standards and evaluations.

- Leadership and motivation.
- Employee disciplinary process.
- Rights and responsibilities of employees.
- Sexual harassment/orientation and discrimination prevention.
- Grievance procedures.
- Civil liabilities of supervisors.
- Planning, organizing, staffing, and controlling.
- Organization and mission of the Department and its facilities.

32010.17.4 Manager Development

Programs for development of managers shall contain, at a minimum, the following:

- Administrative and management theories and practices.
- Communication skills.
- Labor relations.
- Organizational development skills (team building, delegation, etc.).
- Affirmative Action, EEO.
- Administration of personnel policies and procedures.
- Planning and managing operations.
- Leadership and motivation.
- Fiscal administration.
- Internal evaluation/tracking system.

32010.17.5 Compensation

Any training activity that is directly related to the employee's job or is designed to make the employee perform job duties in a more efficient and effective manner is compensable under FLSA rulings. However, if the training is instituted for the bona fide purpose of upgrading the employee to a higher skill or preparing them for advancement, compensation is not required even though the training may incidentally improve the employee's skills in doing their regular work (FLSA Section 785.29).

If an employee on their own initiative attends an independent school or college after regular work hours, the time need not be compensated even if the courses are related to the employee's job (FLSA Section 785.30).

32010.18 Centralized Training

The training services and resources of the TSB are designed to provide the training and development services necessary to meet the policy and objectives of centralized departmental training and shall contribute to the achievement of the Department's mission and goals by articulating departmental policy and procedures in the performance of job duties.

32010.18.1 TSB, Sacramento

Consultation Services

Consultation services to provide training analysis/assessment, design, scheduling, presentation, and coordination of training activities and serves as expert resource in all areas of training.

Materials Support

Training presentation materials are available upon request. Examples include, but are not limited to, the following:

- Reproduction of handout materials.
- Library books.
- Flip charts.
- Reference materials.

Lesson Plan Development

Assistance in developing lesson plans shall be given, within acceptable time frames, upon the written request of the employee. The request shall be cosigned by the IST Manager or the Assistant Manager. Avoid duplication of effort and ensure the timeliness of the request. Each request shall state:

- The title of the lesson plan.
- The objectives of the training.
- A brief description of the material to be covered.
- The target audience who will receive the training.
- The length of time allotted for the training.

Audio/Visual Aid

Audio/visual aid support shall be given directly or referred to the appropriate resource depending on the nature of the request. TSB can provide a limited audio/visual equipment loan service. Equipment such as videocassette recorders and monitors can be borrowed for use at off-site training locations. Additional equipment is available only when training is conducted at the headquarters' office.

Training Course Design/Presentation

Assistance shall be given in technical areas, i.e., supervision and management training. The TSB shall provide management training to targeted departmental staff that reflects the current management needs of the Department and incorporates state-of-the-art process skills in professional management.

Urgent Needs Training

Frequently, an unforeseen need for training arises. The TSB staff shall, in such circumstances, assist in the development of the needed program. Such services include, but are not limited to, lesson plan development, T-4-T, and course presentation methods.

32010.18.2 Annual Training Plan

Annual training plans shall be submitted by each Warden and RPA by April 1 of each year. The annual training plan is prepared to take effect on July 1 and includes all planned training for the coming fiscal year. The TSB shall:

- Develop a standardized format for facilities/regions' annual training plans.
- Review and approve the plans.
- Consolidate all approved plans and utilize the fiscal totals in developing the annual departmental training plan.
- Use the training plans as guidelines when conducting IST audits.

32010.18.3 TSB, Galt

The TSB, Galt, is located at the Academy.

The Basic Academy is located at the Academy. For more information regarding the basic academy refer to DOM 32020.

A portion of the Academy is devoted to advanced training to provide centralized programs of instruction for departmental employees.

The training officers who are assigned to advanced training and special programs are supervised by the Administrator of Academy under the direction of the Chief-TSB.

This Branch shall:

- Design, develop, and conduct training programs for identified departmental employees that are required by State, federal, and local laws and by departmental policy.
- Provide services and resources to IST offices and requesting employees as described in DOM 32010.18.1.

Advanced Training Sites

Advanced training courses shall be conducted at the Academy as space permits.

When contingency sites are to be used, Academy staff shall notify the IST office of the change in location at the earliest possible date by both telephone and by memorandum.

Accommodations

When training is provided at the Academy, accommodations (lodging and meals) will be provided by the Academy. Housing will be on-site within established capacities. When participants in training exceed housing accommodations on-grounds, off-site housing will be arranged and paid for by the Academy; meals will continue to be provided by the Academy. Per diem for participants shall not be authorized.

Participants who desire to arrange their own off-site housing may do so at their own expense.

32010.19 Weapons

The importance of training in the safe and proper use of weapons authorized in DOM 55050 cannot be over emphasized. It is essential that each individual who may issue, use, or supervise the use of departmental weaponry be fully trained in procedures, policy, and safety matters relating to the weapons. All persons designated as peace officers under PC 830.5 and those so designated by the Director prior to assuming peace officer duties shall successfully complete the Department's qualification requirements.

32010.19.1 Weapons Qualification

All personnel subject to PC 832 training and other designated officials requiring such training shall successfully complete the weapons qualifications course mandated at the specific academy attended. Standards for academy weapons training and qualifications shall be the responsibility of the appropriate Deputy Director. Standards shall meet PC, Department policy, and job-related requirements.

32010.19.2 Compliance With Qualification Requirements

Failure to successfully complete the mandatory weapons qualifications shall result in appropriate administrative action.

Basic Academy

Cadets attending the Basic Academy who fail to complete mandatory weapons qualifications shall be rejected on probation.

PC 832 Academy

Every entry-level peace officer shall:

- Complete training required by PC 832 prior to exercising peace officer powers.
- Qualify in the use of firearms within 90 days following employment by the Department. Except for Officers, they must qualify to graduate.
- Handgun-employees shall complete the required P.O.S.T. qualification course with a minimum score of 80 percent during training at the academy. One retest is authorized. Failure on the retest will result in the employee being returned to the sending facility without PC 832 certification. The employee may attempt to again qualify in one of three ways:
    - Return to the academy and repeat the firearms course in PC 832.
    - Enroll in a P.O.S.T.-approved handgun course at RJD. The sending facility should contact RJD's IST Manager to determine their course schedule. All related costs will be the responsibility of the sending facility.

- Enroll in a local P.O.S.T.-certified handgun course (i.e., community college). The Academy will provide each facility with the names and locations of P.O.S.T.-certified presenters. Payment of all costs and fees will be the responsibility of the sending facility. Cost and course length may vary for each handgun course presenter. Some presenters offer a two-or three-day course for a very nominal registration fee.

- Failure to successfully complete the course shall result in the termination of that appointment within the peace officer classification.

Nonentry-Level Peace Officer

Employees appointed to non-entry-level peace officer positions shall be given 90 days within which to complete the basic weapons qualifications course outlined in the appropriate academy. Failure to successfully complete the course shall result in the termination of that appointment within the peace officer classification.

32010.19.3 Weapons Requalification Requirements

All employees subject to PC 832 training shall periodically demonstrate satisfactory knowledge of weapons policy and usage. Requalification shall be accomplished through written examination and/or actual performance.

Requalification requirements are based upon level of responsibility, duties performed, and weaponry appropriate to the function. These requirements are as follows:

ANNUAL REQUALIFICATION REQUIREMENTS

	Policies	Mini-14 Rifle	H&K Carbine	Handgun	Shotgun	Baton
Group I						
Headquarters and PAs	X					
Group II						
Warden	X					
Associate Wardens and Captains	X					
CC-III	X					
Administrative Officer-of-the-Day	X					
Group III						
Captain	X	X		X		X
Lieutenant	X	X		X		X
Sergeant	X	X		X		X
Officer	X	X	X	X	X	X
Group IV						
Senior Special Agent	X	X		X	X	
Special Agent	X	X		X	X	
Transportation Officers	X	X		X	X	
Group V						
CC-II	X	X				
CC-I	X	X				
Group VI						
Senior MTA	X			X		
MTA	X			X		
Facility Fire Chief	X			X		
Facility Firefighters	X			X		
Group VII						
PA--III	X			X *		
PA--II	X			X *		
PA--I	X			X *		
Field & PA	X			X *		

X * Denotes armed agents only

32010.19.4 Requalification Standards

Headquarters/P&CSD Administrators Managers

The standards for requalification are as follows:

- Group I. Headquarters and P&CSD administrators/managers who are designated peace officers shall receive training in the use of departmental weaponry annually. The training course topics shall include, but not be limited to, the following:
  - State law and departmental policy.
  - Discussion and demonstration of all standards and specialized departmental weaponry and chemical agents used by the division.
  - Written pass/fail examination.

Nonuniform Facility Managers

- Group II. Nonuniform facility managers who are peace officers and designated AOD shall receive training in the use of facility weaponry annually. The training course topics shall include, but not be limited to, the following:
  - State law, departmental policy, and facility procedures.
  - Discussion and, where appropriate, demonstration of all standard and specialized facility weaponry and chemical agents.
  - Emergency situation tactics.
  - Written pass/fail examination.

Captains, Lieutenants, Sergeants, and Officers

- Group III. Captains, Lieutenants, Sergeants, and Officers (regardless of current assignment) shall receive training in the use of departmental weaponry annually which shall include:
  - Weapons' policy.
  - Use and effects of force.
  - Discretionary decision-making.
  - Emergency situation tactics.
  - Side-handle baton recertification.
  - Live fire requalification with rifle(s), handgun and refamiliarization with the shotgun. (See Course of Fire, DOM 32010.19.6 through 32010.19.6.4.)

Senior Special Agents/Special Agents Transportation

- Group IV. Senior Special Agents, Special Agents, and Transportation Unit staff shall receive annual training in the use of departmental weaponry which shall include:
  - Weapons' policy.
  - Use and effects of force.
  - Discretionary decision-making.
  - Emergency situation tactics.
  - Live fire requalification with rifle and handgun.
  - Live fire refamiliarization with the shotgun. (See Course of Fire, DOM 32010.19.6 through 32010.19.6.4.)
- Group V. CC-Is and CC-IIs shall receive training annually in the use of designated departmental weaponry which shall include:
  - Weapons' policy.
  - Use and effects of force.
  - Discretionary decision-making.
  - Live fire requalification with the mini-14 rifle. (See Course of Fire, DOM 32010.19.6.1.)
- Group VI. Senior MTAs, MTAs, facility fire chiefs, and facility firefighters shall receive training in the use of designated departmental weaponry annually which shall include:
  - Weapons' policy.
  - Use and effects of force.
  - Discretionary decision-making.
  - Live fire requalification with the handgun. (See Course of Fire, DOM 32010.19.6.3.)
- Group VII. PA-Is, PA-IIs, PA-IIIs and field administrators shall receive training in the use of weapons annually which shall include:
- State law, departmental, and divisional policy.
- Use and effects of force.
- Classroom refamiliarization with the P&CSD's weapons.
- Review of P&CSD arrest procedure.
- Live fire requalification with the handgun for agents who are armed.

All new Officers shall requalify with the rifles and handgun prior to the completion of probation. The Course of Fire as listed in DOM 32010.19.6 through 32010.19.6.4 shall be used.

All facility, parole, and field unit staff subject to PC 832 shall complete a chemical agent course. This training shall include departmental policy regarding use, safety, handling, and effects of exposure to chemical agents.

Instructor requirements

Candidates for the Rangemaster/Chemical Agents instructor course shall meet eligibility requirements outlined by the Academy prior to enrollment. Candidates shall be Officers with current first aid and CPR certification prior to enrollment or credentials shall be withheld. The entire approved course shall be successfully completed at the Academy prior to issuance of a certificate of completion.

The Academy shall conduct recertification T-4-T for master trainer rangemasters from each facility. These master trainers shall conduct recertification courses for all other rangemasters at their facilities. The recertification T-4-T course shall be offered annually.

The recertification training shall be scheduled by the IST Manager at each facility and shall be coordinated with the Academy's Advanced Training Unit. Upon successful completion of the course, the Academy shall issue a renewed Rangemaster Certificate valid for another five years. The recertification shall occur prior to expiration of current certificate.

32010.19.5 Compliance Requalification Requirements

Revised February 21, 1995

The facility training manager shall review the minimum firearm qualification/requalification requirements of all personnel covered by this section on a quarterly basis. The training manager shall notify the employee's direct supervisor in writing of impending requalification dates at least 30 days in advance. Utilization of the monthly training calendar to satisfy advance written notice of requirements is acceptable. First-line supervisors shall work with the training manager to ensure that their subordinates meet these minimum qualification/requalification requirements.

Each peace officer shall maintain current weapons' certification as outlined in this section.

Range Remediation Policy

Peace officers, other than Parole Agents, who fail the first attempt but have otherwise demonstrated an adequate level of operational knowledge with the firearm, may be given another opportunity. This determination will be made by the Rangemaster.

Notification of Failure to Meet Range Requalification

Those who fail to requalify after this additional opportunity and those whom the Rangemaster determines do not appear to have sufficient proficiency after the initial attempt, will be required to complete remediation training prior to being scheduled for further requalification attempts. These employees shall receive a memorandum of failure to meet range requalification . A copy may only be sent to IST and the Captain. The notification shall advise the employee that:

- The employee appears deficient in the necessary skills to requalify and will be assigned to two hours of firearm familiarization and training. This remediation shall be weapon specific and based on the standardized rangemaster lesson plan.
- Failure to meet the requirements within a 60-day period shall result in termination of the employee's appointment as a peace officer, unless exempted by a temporary waiver.

If, after two hours of remediation training, the employee again fails to requalify, they will be scheduled for up to two additional remediation sessions. All remediation and requalification must be completed within the allocated 60 days.

Arrangements may be made to conduct the training during the employee's regular duty hours. In those situations where the training must be conducted on the employee's off-duty hours, this time will be considered time worked and compensable under the FLSA requirements.

The employee shall not be permitted to work in an armed post or any other assignment that requires the employee to be armed until minimum requalification requirements are completed.

Parole Agent

Parole agents who are armed as a condition of employment and who do not qualify within 30 calendar days of the quarter in which they failed shall be placed on leave without pay for no longer than two months. Failure to qualify within this period shall result in the Parole Agent being separated from State service per the MOU for Unit 6, Section8.03(e).

Temporary Waiver

Special circumstances may warrant a temporary waiver of weapons requalification requirements. Upon approval of the Warden or RPA and subject to concurrence by the appropriate Deputy Director and the Chief Deputy Director, a temporary waiver may be considered for the following reasons:

- Physical injury.
- Illness.
- Authorized leave of absence.
- Psychological trauma affecting the employee's ability to comply with requalification requirements.
- Detached duty.
- Pregnancy.

The waiver shall be reviewed at intervals of no more than one year. Upon expiration of the waiver, the employee shall complete requalification requirements within 60 days as described in DOM 32010.19.3.

32010.19.6 Course of Fire

The following courses of fire shall be utilized as the standard to demonstrate annual basic weapon competency. Silhouette targets similar to those utilized by the FBI shall be used for rifles and handguns.

Scoring Policy

If participants have fewer hits on their target than the course allows but still achieve a qualifying score, they will not be required to re-shoot.

If participants have more hits on their target than the course allows and also have a qualifying score, they will be required to re-shoot without penalty. The original shoot will not count as one of the allowed qualifying attempts.

32010.19.6.1 Ruger Mini-14

Ruger Mini-14 .223 Caliber Rifle

Distance	Time	Position	Rounds
50 Yards	30 Seconds	Point Shoulder	5
	45 Seconds	Kneeling	5
100 Yards	45 Seconds	Point Shoulder	5
	60 Seconds	Barricade	5
	60 Seconds	Kneeling	5
		Total	25

Note: A 70 percent score is required for requalification. Training records shall document raw score and percentage.

32010.19.6.2 Heckler & Koch Model 94-A2

Heckler & Koch (H&K) Model 94-A2 9 Millimeter Carbine

Distance	Time	Position	Rounds
25 Yards	30 Seconds	Point Shoulder	5
	45 Seconds	Kneeling	5
50 Yards	45 Seconds	Point Shoulder	5
	60 Seconds	Kneeling	5
100 Yards	60 Seconds	Barricade	5
		Total	25

Note: A 70 percent score is required for requalification. Training records shall document raw score and percentage.

32010.19.6.3 Smith & Wesson .38 Caliber/9 Millimeter

Smith & Wesson .38 Caliber Revolver

Distance	Time	Position	Rounds
3 Yards	30 Seconds	Hip Level (Strong Hand)	12
7 Yards	30 Seconds	Point Shoulder (Strong or Both Hands)r	12
15 Yards	45 Seconds	Sight (Strong or Both Hands)	12
		Total	36

Note: The P.O.S.T. course of fire requires the single B-27 range target. A passing score is 26 “hits” (72 percent) within the seven-ring portion of the target. A pilot project for a 9-mm course of fire was implemented by P&CSD.

32010.19.6.4 Shotgun

Remington 870 *Wingmaster* Shotgun

Distance	Time	Position	Rounds
25 Yards	60 Seconds	Point Shoulder	2

60 Seconds	Combat Position	3
	Total	5

Note: Live fire with the shotgun is for weapon safety and familiarization only. No minimum qualification score is required.

32010.19.7 Quarterly Proficiency Requirements

All departmental peace officers who are issued a departmental weapon as part of their regular or special assignment such as armed posts, transportation, SERT, Special Housing Unit, Special Agents, etc., or any other previously designated officials considered to require such training shall complete a proficiency course on a quarterly basis prior to assuming the post. This course shall be with the weapon/weapons issued, or maintained in the armed post, assignment, or position. Each facility, special unit, and P&CSD shall determine the quarterly proficiency course of fire and techniques that meet their specific need. The quarterly standards and courses of fire shall be reviewed annually by the appropriate Deputy Director for consistency with departmental policy.

32010.19.8 Off-Duty Weapons

Personnel required by the Department to retain departmental firearms while off duty shall be provided training in the proper and safe storage of these firearms.

32010.19.9 Use of Department' Firearm Ranges by Off-Duty Personnel

The Department shall allow access to its ranges for the qualification of off-duty weapons to those peace officers designated by PC 830.5(c). The conditions stipulated in these rules shall apply to them when utilizing a CDC firing range.

Persons designated above continue to retain the option of qualifying with off-duty weapons on private ranges.

These qualification requirements are voluntary and shall occur only during a person's off-duty hours. It is the responsibility of the individual, not the facility, to maintain their eligibility.

Range Availability

Each facility with an authorized and State-certified Rangemaster shall establish a minimum of two days per month range sessions at predetermined times during which persons designated above may qualify with their personal weapon(s) which they intend to carry off-duty.

Cancellation of scheduled sessions may occur because of inclement weather conditions or lack of participants. In the event a session is cancelled, the facility does not have to schedule a make-up session and all fees paid by the participants for that cancelled session shall be returned to them.

Cost to Participant

Participants are required to pay a fee of $9.00 for each qualification attempt to the facility cashier prior to attending range qualification.

Access to the Range

Each facility shall prepare a "Guide To Off-Duty Weapons Qualification" which shall be made available to persons desiring utilization of the range. This guide shall include, but is not limited to, the following:

- Contact person/position and telephone number for information concerning the program.
- Types and/or color of clothing prohibited if the range is on prison property.
- To whom fees shall be paid and when.
- Procedures for transporting weapon and ammunition to the range if the range is on prison property.
- The specific procedures as to how an eligible person shall participate in and, if necessary, schedule an off-duty weapon qualification session.
- Participants shall have in their possession at the time of entry to a facility/range of CDC a valid employee identification card from their Department which indicates the employee peace officer status or a written designation by the employee's Director or Chairperson which authorizes that employee to carry a concealed off-duty weapon.

Rangemasters

Rangemasters shall be current participants in the CDC range training program. Rangemasters shall be employed at the same facility as the range unless authorized by the Warden or designee. All rangemasters shall be able to identify safe operations of both double action revolvers and semiautomatic pistols.

Rangemasters shall maintain full authority for range activities and may exclude/expel any participant from the range for good cause.

Weapons and Ammunition

Only concealable handguns consisting of .22 to .45 caliber shall be used on CDC ranges. No blackpowder guns, shotguns, or rifles shall be permitted. Only double action weapons shall be permitted.

All ammunition shall be supplied by the participant. Only factory loaded/reloaded ammunition shall be accepted. Snake loads and loads that exceed industry standard are not acceptable rounds and shall not be permitted.

Prior to use, all weapons and ammunition shall be inspected by the Rangemaster. Any weapon or ammunition deemed unacceptable or unsafe shall be removed from the range and not used.

Each participant shall provide his or her own off-duty weapon with a strong side hip holster.

Qualification Requirements

The approved handgun course of fire, as specified in DOM 32010.19.6.3, shall be used.

There shall be no classroom session. Participants shall receive from the IST office:

- CDC Form 1799, Range Safety Rules.
- A pamphlet on California firearms laws.

Participants shall sign a CDC Form 1798, Annual Acknowledgement of Receipt of Range and Firearm Safety Rules and PC Related to the Possession and Use of Off-duty Firearms, acknowledging that they have read and understood all applicable PC relating to possession or use of off-duty firearms by off-duty staff. In

addition, participants shall acknowledge in writing that the handgun they are using has not been modified and that it meets manufacturer's specifications (exception: handgrips and sights).

Recordkeeping

The facility shall maintain a copy of the participant's official score sheet for six months. It is the participant's responsibility to maintain current qualification.

The participant upon attaining a passing score shall be provided a CDC Form 1803, Off-duty Firearm Qualification Certification that documents the quarterly qualification.

Off-Duty Disqualifying Factors

The employee-appointing Director or Chairperson may deny, suspend, or revoke for good cause a person's right to carry an off-duty concealable firearm.

Persons permitted to carry firearms pursuant to PC 830.5(c) shall meet the training requirements of PC 832 and shall qualify with the firearm at least quarterly. It is the responsibility of the individual to maintain their eligibility to carry an off-duty firearm. Carrying a firearm off-duty without maintaining the quarterly qualification shall constitute good cause to suspend or revoke that person's right to carry firearms off-duty.

Appeal of Revocation of Authorization to Carry Off-Duty Firearms

Within 15 working days of receipt of a notification that an individual's authorization to carry an off-duty concealable firearm has been suspended, revoked, or denied, the individual may appeal the decision, in writing, to the appropriate Director or Chairperson who issued the decision.

Persons are prohibited from carrying a concealable firearm off-duty during the appeal period.

Adverse Personnel Action

Pursuant to PC 830.5 and 12031, carrying a concealed loaded firearm without maintaining the quarterly qualification is prosecutable and the employee may be subject to adverse personnel action.

32010.19.10 Weapons Qualification Card

All persons designated as peace officers under PC 830.5 and those so designated by the Director who are required to requalify with weapons at least annually shall carry upon their person at all times while on duty a CDC Form 861, Weapons Qualification Card. This card shall be issued by the TSB through the individual facility or parole region and shall provide verification of successful completion of required firearms requalification training. Each employee shall notify the supervisor at the time of assignment to an armed position if the requalification or quarterly proficiency requirement has not been met within the preceding 90 days.

32010.19.11 Less Than Lethal Weapons

Training in the use of less than lethal weaponry (baton, taser, etc.) is required for personnel authorized to use or supervise the use of these weapons per DOM 55050.

Taser Certification Requirements

Personnel authorized to use or authorize the use of the taser shall, prior to such acts, successfully complete the standard course of training (one hour) which includes policy, procedures, use, safety, and effects of use.

Recertification Requirements

Every other year, each person qualified to use or who authorizes the use of the taser shall repeat the above-described course.

See DOM 51030, Reportable Incidents; 54060, Medical Staff/Use of Taser in Psychiatric Units; and 55050, Authorization/Use/Limitations and Storage, for additional information on the taser.

Baton Certification Requirements

Personnel authorized to use departmental batons shall successfully complete the standard course of training prior to issuance or use of any baton. Training shall include policy, procedure, use, safety, and effects of use. The 12-hour course shall cover both the side-handle and straight batons.

Recertification Requirements

Annually, each person qualified to use departmental batons shall successfully complete the standard course of recertification (two hours).

Individuals whose baton certification has lapsed shall take the recertification course and demonstrate competency to be issued a certificate. If competency is not demonstrated after completion of the recertification course, then the individual will have to complete the 12-hour certification course.

Instructor Requirements

Candidates for the baton instructor course shall meet eligibility requirements outlined by the Academy prior to enrollment. Candidates shall be peace officers with current first aid and CPR cards prior to enrollment or credentials will be withheld. The entire approved course shall be successfully completed at the Academy prior to issuance of a certificate of completion.

Side-handle baton instructors shall complete a 16-hour instructor recertification course every three years. If the certification to instruct the course has expired, the instructor will not be utilized until the 16-hour instructor recertification course is completed. Anyone failing the recertification course shall be required to repeat the initial 40-hour instructor certification course before being utilized as an instructor.

32010.19.12 Munitions

Personnel designated to use munitions as stated in DOM 55050 shall be trained in the use, employment, safety, and effects of this resource prior to usage. Refresher training only by approved ATA.

32010.20 Lesson Plan Approval

In order for an activity to be considered training rather than a meeting, conference, or convention, a detailed lesson plan shall be approved as follows:

- Facility personnel shall submit lesson plans to the IST Managers.
- P&CSD staff shall submit lesson plans to the regional training coordinators.
- Headquarters' staff shall submit lesson plans to the Chief-TSB.

Each lesson plan shall include measurable learning objectives and a test. The plan shall be submitted at least 60 days prior to the planned event. Headquarters' staff shall also submit a CDC Form 1329, Request to Conduct Training .

DTAC and JAC

Training developed by headquarters for field staff requires review by the DTAC. If the planned training impacts rank and file peace officers or probationary peace officer supervisors, a review may also be required by the JAC. The TSB coordinates both reviews and should be contacted as soon as a need for training is identified. These additional reviews may extend the necessary review time beyond the normal 60days.

32010.21 National Institute of Corrections

The number of training slots available for California participation is very limited. It is essential that staff clearly understand and follow the application process.

Upon receipt of the National Institute of Corrections' (NIC) annual schedule, the TSB shall notify all Deputy Directors and Assistant Deputy Directors. Requests to attend NIC training sessions shall be submitted to the Chief-TSB, through the appropriate Deputy Directors or Assistant Deputy Directors. Facilities shall submit their requests to the Deputy Director, Institutions Division, for initial review and approval. Parole regions shall submit their requests to the Deputy Director, P&CSD.

This application package shall include:

- A completed NIC application form.
- A copy of the course description.
- A cover memorandum signed by the Warden, RPA, Deputy Director, or Assistant Deputy Director justifying the attendance and specifying that no cost shall be incurred by the Department.

The Deputy Directors or Assistant Deputy Directors shall send the Chief-TSB, application packages and a list, in priority order, of those individuals to be considered for NIC attendance. The Deputy Directors and Assistant Deputy Directors shall indicate their approval only on the cover memorandum included in the package.

Once the application packages have been received, the TSB shall:

- Submit the packages to the Director for final approval and signature.
- Obtain the necessary authorization for out-of-state travel.
- Submit to NIC the names of staff with departmental approval to attend.

Attendance at NIC is very competitive and departmental approval does not guarantee acceptance. NIC notifies the employees directly regarding acceptance or rejection. Copies of this notice shall be sent by the employee to the Chief-TSB, and to the Accounting Services Section.

32010.22 Revisions

The Deputy Director, ASD, or designee shall be responsible for ensuring that the contents of this section are kept current and accurate.

32010.23 References

DPA Rules 19995 - 19995.4 and 599.815 - 599.824.

CCR (8) § 3203.

GC §§ 14740 - 14774.

29 USC 785.27 - 785.31 (FLSA)

PC §§ 830.5, 832, 12403, and 13601.

SAM §§ 750.1, 1610, 2590.2, and 2664.

MOU for Bargain Unit 6, § 8.03(b).

GISO 5194 Card.

ARTICLE 19 — ACADEMY TRAINING

Effective February 15, 1990

32020.1 Policy

Employees shall, regardless of job classification or seniority, participate in programs of continuing education that refine and expand their professional knowledge and skills. The Academy shall provide effective entry level peace officer training and courses for advanced and/or senior employees, managers, non-sworn employees, and other employees, who require training to meet legal and job performance expectations.

32020.2 Purpose

This section specifies departmentally approved training methods, standards, and applications specific to Academy training.

32020.3 Objectives

The objectives of the Academy are:

- To carry out the mandates of departmental administration.
- To assist in the evaluation and selection of peace officer candidates.
- To design and present contemporary, cost-effective programs to refine and expand the professional knowledge and skills of the attending students.
- To meet departmental standards and ensure the highest quality for Academy programs.
- To provide training services and information to departmental institutions and parole regions.

32020.4 Departmental Responsibility

The Director established the general policy governing the departmental training program. The Deputy Director, ASD, shall administer the training program, the overall supervision is delegated to the Chief, Training Services.

The Chief-TSB (Correctional Administrator level), shall determine training needs, audit courses currently being presented at the Academy, function as an administrative liaison between the Joint Apprenticeship Committee, Presley Institute, academy administrator and institutional training managers, as well as selection of academy personnel. These functions may be delegated to the Academy administrator.

32020.4.1 Academy Administrator

Under the direction of the Chief-TSB, the Academy Administrator (Captain) acts as a liaison with other divisions, institutions, parole regions, other departments and agencies, while ensuring compliance with departmental policies and procedures.

- Shall maintain the integrity and consistency of all course programs presented at the Academy.

32020.4.2 Assistant Administrator (Business Manager II)

Under the supervision of the Academy Administrator, the Assistant Administrator shall establish the overall direction of the business services functions for the Academy by:

- Preparing reports, manuals, and documents required by departmental administration, control agencies and divisional administration, including but not limited to reviewing and evaluating existing policies and procedures, and the development of BCPs.
- Serving as a resource person to Central Office training personnel concerning budgetary, accounting, and procurement activities.

32020.4.3 Commander, Basic Academy

Under the direct supervision of the administrator, the Commander (Captain) directs the daily operation and overall supervision of the Academy and subordinate staff by overseeing the planning, development and organization of the entire Basic Academy curriculum, including lesson plan development, course/subject validation, and its update. The Commander evaluates existing classes for course content and instructor presentation technique.

32020.4.3.1 Assistant Commanders, Basic Academy

Under the direct supervision of the Commander (Captain) the Lieutenants (3), direct the daily operation and overall supervision of the Academy and subordinate staff.

- Lieutenant (1) -- Shall be the Tactical Lt. responsible for the physical training, PR-24 instruction, firearms qualification, inspections, drill, and ceremony.
- Lieutenant (2) -- Shall be the Administrative Lt. responsible for investigations, rejections on probation and Skelly Hearings. This position functions as the ERO and EEO, and provides contract training for all bargaining units represented at the basic academy.
- Lieutenant (3) -- Shall be the Academic Lt. responsible for lesson plan review, up-date of classroom instruction, testing standards, academic probation, class evaluations, P.O.S.T. certification and acts as liaison to the Presley Institute.

32020.4.4 Advanced Training Section

Under the supervision of the administrator, the Staff Services Manager I for advanced training provides technical guidance to instructors and designers (four lieutenants and one Training Officer I); in the analysis, design and implementation of training at the Academy, institutions and parole regions. This person also coordinates consistency of advanced training courses with those of federal, state, county and city training efforts.

One lieutenant and the Training Officer I revise current lesson plans and training courses involving non-sworn/support for the basic and advanced supervision areas. They also implement training for P.C. 832.

Three lieutenants analyze current training needs for custody supervisors and then design, develop and implement job specific training courses for sergeants, lieutenants and captains.

32020.4.5 Basic Academy Instructors

The basic academy instructors (Sergeants or above) are under the general supervision of a Lieutenant and are the day to day instructors in the academy. They prepare a written evaluation of employees attending the Basic Academy, including both the appraisal of academic achievement and the general performance of the individual as a new correctional employee.

They also provide consultative and/or instructional assistance to institutions, parole regions, and other departments or agencies, as needed.

32020.4.6 Physical Training Instructors

Under the direct supervision of the Tactical Lieutenant and the indirect supervision of the Captain. The physical training instructors (PTIs) provide a specialized physical training program of twenty-seven (27) hours for the Cadets within their six week curriculum.

Additionally, they plan, develop and evaluate schedules/employees, materials and daily lesson plans to assist cadets/trainees/staff throughout the Department in meeting their physical training goals and objectives.

32020.4.7 Cadets

Newly appointed Officer Cadets attending the Basic Academy are formally assigned to the Academy for the period of their training (six weeks). During this period, the cadets comply with the expectations and practices established by the Department for the academy. These expectations and practices shall be written and included in the Trainee Manual, which shall be given to each trainee during the first day of orientation.

- These individuals shall not bring weapons, drugs, alcohol or any other forbidden items onto the Academy grounds. Violators shall be subject to immediate separation from state service and/or formal prosecution.
- There shall be no fraternization between any Academy staff member and any cadet. Conduct between the two shall be professional, at all times (this includes CDC staff temporarily assigned to the Academy as students or instructors). Violators will be subject to adverse personnel action and/or dismissal.

32020.4.8 Other Employees

Employees attending advanced training courses at the Academy remain formally assigned to their sending location during the period of training. During this period the employee shall:

- Maintain punctual and complete attendance to their assigned classes offered during the training, while maintaining a professional demeanor and conduct.
- Comply with the expectations, policies, and practices of the Academy. Written copies of this information, shall be given to the employee during the orientation period. Failure to abide by these expectations shall be cause for immediate return of the individual to the sending location with possible adverse action proceedings to follow.
- Refrain from any interference with the training programs at the Academy. Employees are invited to observe the training within the Academy and provide staff with constructive feedback regarding the training process.

32020.4.9 Academy Personnel Office

All personnel matters regarding the cadets, trainees, and Academy staff, shall be the responsibility of the Academy Personnel Office. Those employees attending the Academy for a limited period shall have use of the personnel office in a liaison capacity with their specific personnel office.

32020.4.10 Institutional Training Managers

The institutional training managers ensure that all employees scheduled for attendance at the Academy training, meet all of the prerequisite criteria for the specific courses scheduled and shall assist each scheduled employee with necessary advanced payments for:

- Meals.
- Lodging.
- Transportation.
- Other appropriate expenses.

They also ensure that information is distributed within the institution regarding the Academy's schedule of advanced training courses.

32020.5 Unfavorable Personnel Actions

Any unfavorable personnel actions regarding employees attending the Academy shall be initiated by the Academy and forwarded to the sending location.

32020.6 Dress Code for Cadets

All cadets/trainees attending the Basic Academy shall follow the dress code.

Clothing and accessories:

Clothing

- Chocolate brown trousers.
- Tan short-sleeve shirt, with academy patch.
- Chocolate brown battle jacket.
- Brown baseball cap.
- Black clip-on tie (shall be worn with jacket).
- Black, plain-toe leather shoes, which shall be highly shined at all times.
- Black, basket-weave pattern 1 3/4 inch wide belt which extends 2 inches past belt loop (all metal accessories shall be of gold color).
- Authorized academy shoulder patch (sewn on the left shoulder of the shirt and jacket).
- Gold whistle, without chain (worn at all times with the uniform).
- Solid black socks.

Accessories

- Name tags: Academy issue only. Must be worn over the right pocket of outer garment. (Shirt or jacket.)
- Identification card: Must be carried at all times.
- Key holder: black basket weave with gold colored key clip.

- Whistle: gold in color, without chain. To be worn at all times with the uniform on the key holder on the right side behind the second belt loop of the trousers.
- Tie bar: plain bar, gold in color.
- Flashlight: black plastic or aluminum only. 2 cell. No heavy metal flashlights (kellite - maglight, etc.)
- Sunglasses: conservative in design. No reflection type.
- Side-handle baton ring: black only. To be worn on weak hand side of belt.
- Collar insignia: Silver in color. "CDC" goes on the right side of the collar, "Cadet" on the left side.

Grooming

- Grooming:
  - Hair shall be cut or arranged in such a manner as to be completely above the shirt collar and off the ears.
  - Sideburns shall be no lower than the middle of the ear.
  - Mustaches shall not extend below the corners of the mouth.
  - Beards or goatees are not permitted.
  - No earrings shall be worn with the uniform.
  - Fingernails shall be clean and well trimmed and shall not extend more than 1/4 inch beyond the tips of the fingers. Fingernail polish, if worn, shall be clear in color.

Jewerly

- Jewelry:
  - There shall be no visible chains or necklaces worn with the uniform.
  - No watches shall be worn on chains or pinned to the uniform.
  - No jewelry shall be worn on the wrist, except for a wrist watch.
  - Wedding bands shall be the only rings worn.

Precious or semi-precious stones shall not be worn (except in wedding bands).

32020.7 Curriculum

The courses which are offered during the Basic Academy include:

- Arrest procedures - 28 hours.
- Firearms training - 40 hours.
  - 8 hours classroom.
  - 12 hours with the .38 caliber revolver.
  - 8 hours with the mini-14 rifle.
  - 8 hours with the HK 9mm carbine.
  - 4 hours with the 870 Remington shotgun.

Other courses are developed from recommendations by a variety of departmental CAs and supervisors. These courses are based on the current policy and practices within the Department, current case and statutory law, and the specific skills/knowledge necessary for the job with relevancy to work at the job site.

The training consists of classroom lectures, field training exercises, practical demonstration and application, physical fitness training and conditioning, and individual studies concerning common experiences of Officers.

32020.7.1 Lesson Plans

Lesson plans and copies of all handout materials shall be maintained on file at the Academy.

- Lesson plans may be provided to departmental institutions, parole regions, other departments, and agencies upon request.

32020.7.2 Testing

All candidates attending the Basic Academy shall be tested on the concepts and skills taught to them.

The testing process shall consist of five primary areas:

- All classes presented during the arrest course portion of the Basic Academy (P.O.S.T. written examination).
- Practical demonstration of firearms familiarity by firing of departmentally approved and issued weapons (scored demonstration).
- Use of chemical agents (both written examination and field application, including exposure to the chemical agents).
- All classes (except chemical agents) presented during the subsequent weeks of academy training (written examination).
- Physical training exercises (demonstration of ability).

Minimum Scores

A minimum score shall be established in each area of training. Each trainee shall attain at least the minimum score in order to demonstrate an acceptable level of achievement.

Trainees shall attain at least the minimum score of:

- 80% on all written examinations.

- When demonstrating knowledge and use of firearms [revolver, (80%), rifle, carbine and shotgun (70%)].
- When demonstrating knowledge and use of chemical agents.
- Maintain minimum overall score of 85% to graduate.

32020.7.3 Re-Testing

Trainees not achieving a passing score on any written examination shall be provided with an opportunity to retake the same, or similar, written examination. The trainee shall be given a minimum passing score if they successfully pass the re-test examination.

Any trainee not achieving a passing score during the firing portion of the firearms training shall, within five working days, be given an opportunity to re-fire the weapon(s). This re-testing shall be accompanied by additional instruction and supervision by an academy rangemaster.

Any trainee who does not initially demonstrate confidence with the chemical agents shall be provided with an additional opportunity to familiarize themselves with these items.

32020.7.4 Evaluation

Each trainee shall be continually evaluated during the Basic Academy. The evaluation shall give specific attention to the following areas of interest:

- Score achieved on all examinations.
- General academic performance.
- Professional appearance and behavior.
- Relationships with people.
- Punctuality.
- Quality of the final product of assigned tasks.
- Response to directions and constructive criticism.

The written evaluation report shall be prepared by the trainee's assigned academy advisor (Academy instructor), and shall represent feedback from all academy instructors who have had contact with the trainee being evaluated.

Distribution of Evaluation

Two copies of the evaluation report shall be prepared. The original copy shall be forwarded to the trainee's receiving/hiring institutions' Training Manager for the institutions' training file. A copy of the report shall also be sent to the trainee following successful completion of the academy.

The report may be used by the trainee's assigned first-line supervisor at their institution in the preparation of the employee's probationary performance report and any follow-up training plan.

32020.7.5 Dismissal/Rejection

Trainees who fail their initial examinations and any re-tests may be rejected during their probation in accordance with departmental procedures.

- Any dismissal/rejection actions initiated by the Academy shall be coordinated by it, and upon completion forwarded to the hiring institution of the affected trainee.

Any trainee subjected to dismissal action is entitled to all rights and privileges afforded by relevant personnel laws and regulations.

32020.7.6 Follow-Up

The Academy shall establish a method to evaluate the usefulness and relevancy of the courses offered, using information collected from a sample survey of both institutional Training Managers and employees who have successfully completed the Basic Academy. The results of the evaluation shall be used to update and/or modify the course process and content to reflect institutional work in an accurate manner.

- A summary report on the responses to the sample survey shall be maintained in Academy files. The report shall be made available to the Chief-TSB, and to members of the Training Advisory Committee.

32020.8 Advanced Training

The need for courses offered by the Academy for advanced and/or senior employees of the Department shall be based upon:

- New laws and/or court decisions affecting operations of correctional institutions and/or parole regions.
- Departmental mandates as a result of significant changes in policies and/or procedures.
- The findings of the Training Advisory Committee as a result of auditing current courses.

Prerequisites

Specific prerequisites shall be established for each course. The prerequisites shall identify:

- The job classifications of employees who would most benefit from the course.
- Any special previous experience or education/training which would aid the employee to specifically benefit from the course.

32020.8.1 Evaluation

Each employee attending an advanced training course shall be given the opportunity to evaluate, in writing, the course process and content. The evaluations shall be returned to the Academy prior to the employee's departure.

The course evaluations or a summary shall be maintained on file by the Academy. The evaluations shall be made available to the Chief-TSB, for review upon request.

32020.9 Housing and Food Services

All employees attending courses at the Academy shall be provided with living accommodations. The Food Service Unit of the Academy shall provide meals.

32020.10 Curriculum Updating

Academy staff shall review all courses offered to ensure maintenance of current information that is used in all Academy presentations. The review date shall be indicated on the approved lesson plan and shall not exceed 12 months between review dates. The review shall include:

- All lesson plans.
- All handout materials.
- All course evaluations.
- Current reference materials available.

Academy employees shall be responsible for updating all handout materials. The Joint Apprentice Committee and the Presley Institute will review all revised lesson plans.

32020.11 Program Auditing Reports

A program auditing report shall be submitted to the Chief-TSB, on a quarterly basis.

The audit report shall include the following general information:

- Statistical data representing the total number of employees attending academy course programs.
- Summary reports presented during the reporting period.
- Other programs coordinated through the facilities of the Academy.
- Services provided to other departmental agencies or facilities by the Academy.
- Other significant developments occurring during the reporting period which would affect the Academy's overall operation.

32020.12 Institutional Resource Sites

Firearms and chemical agent demonstration exercises shall be conducted at a qualified range approved by the Chief-TSB.

Institutions of the Department may be used by the Academy to familiarize employees at the Basic Academy with various institutional settings.

- The OJT familiarization exercise in the institutions is subject to the approval of the Warden, or designee, of the hosting institution and the availability of employees at the hosting institution to assist with the OJT exercises.

32020.13 Consultant Services

The Academy may use non-departmental consultants in the preparation and/or presentation of courses.

- Consultants from other state departments and/or agencies may only be used with the specific authorization of the employing department/agency.
- A contract shall be approved before a consultant from a private agency provides services to the Academy. (See Section 22050 of this manual).

32020.14 DTAC

Members of the Training Advisory Committee consist of departmental personnel with interest and experience in correctional training; they are selected by the Academy administrator.

The Training Advisory Committee shall:

- Review lesson plans, handout material(s) (used by the Academy for both basic Officer and advanced correctional employee training) with recommendations for new courses and the termination of some outdated courses as well as changes or additions in course outlines and handout material(s).
- Review employee score patterns and institutional follow-up reports to determine significant areas of academy training which warrant consideration for change in process and/or content.
- Review departmental procedure changes, new laws and court decisions, and recent institutional experiences which may suggest the need for specialized training by the Academy.

32020.15 Revisions

The Deputy Director, ASD, or designee shall ensure that the content of this section is accurate and current.

32020.16 References

PC §§ 832, 5092, 13601.

MOU Unit 6.

ARTICLE 20 — PERSONNEL POLICIES

Revised July 15, 1999

33010.1 Policy

The Department shall, through the provisions of this section:

- Assure a uniform and equitable basis for employer/employee relations.
- Maintain open channels of communications that permit the exchange of information and ideas in a cooperative manner to ensure increased departmental efficiency and the well-being of employees.
- Further the understanding of rights, and obligations of the Department and employee organizations.

33010.2 Purpose

This section specifies requirements for employer/employee relationships.

33010.2.1 Employee Notification

Each institution, parole region and community correctional facility shall establish a policy for the purpose of employee notification. It is the responsibility of each Warden, Regional Parole Administrator and Community Correctional Center Administrator to establish procedures to notify employees at work of personal emergency situations. Personal emergencies that require employee notification shall be routed to the area manager/supervisor who will determine if the situation warrants immediate employee notification.

33010.3 Disclaimer

If any provision in this section is in conflict with a Memorandum of Understanding (MOU), the MOU shall prevail as it relates to the specific represented group.

33010.4 Management Team

Employees designated as manager, supervisor or confidential shall be members of the management team.

"Supervisors" and "supervisory employees" refer to persons designated as supervisors pursuant to the State Employer Employee Relations Act (SEERA). Persons not so designated are not supervisors within the meaning of SEERA, even if their working or class title includes the term "supervisor," and shall not be considered part of the management team for the purpose of this section.

The management team shall:

- Relate with all employee organizations and their official representatives, regardless of title or classification, as equals on all matters within the scope of representation.
- In good faith, abide by all terms, conditions or provisions of all MOUs in effect.
- Meet and confer in good faith with exclusive employee representatives promptly upon request.
- Upon request, shall meet and confer with all employee organizations representing supervisory employees. "Meet and confer" means that they shall consider as fully as the employer deems reasonable representations made on behalf of supervisory members prior to arriving at a determination of policy or course of action.
- Give consideration to the viewpoints submitted by individual employees and organized employee groups in connection with the development of policy and in determining courses of action relating to employer/employee relations.

33010.5 Employees Right to Organize

The state recognizes the right of state employees to join and participate in organizations of their own choosing and be represented by such organizations in their employment relations with the state.

In order to guarantee this right, the management team shall not:

- Impose, threaten to impose, cause or allow any type of reprisals on employees because of their exercise of rights guaranteed them by SEERA, departmental policy, MOU, or any other applicable law or rule.
- Conduct any type of business relating to wages, hours, or working conditions of unit employees with any organization except the exclusive representative.
- Participate in handling grievances on behalf of employees.
- Participate in meet-and-confer sessions on behalf of nonsupervisory employees.
- Influence, cause to be influenced, interfere with, or in any way condone the influence of internal affairs of a rank and file employee representative organization.
- Influence, cause to influence, interfere with, or in any way allow the influencing of the unit election process.
- Contribute to any organization financial or any other type of support that is used for representation of rank-and-file employees.

Represented employees shall not:

- Participate in handling grievances on behalf of supervisory employees.
- Participate in meet-and-confer sessions on behalf of supervisory employees.

33010.5.1 Rights of Employees

Rank and file employees shall have the right to:

- Form, join, and participate in the activities of employee organizations of their own choice for the purpose of representation on all matters of employer/employee relations.
- Refuse to join or participate in activities of organizations.

- Withdraw from organizations.
- Represent themselves individually in their employment relations.

Supervisory employees have the right to:

- Form, join, and participate in the activities of employee organizations of their own choosing for the purpose of representation on all matters of supervisory employer/employee relations.
- Refuse to join or participate in the activities of employee organizations.
- Represent themselves individually in their employment relations.

Employees shall not be granted preferential treatment or have equitable treatment withheld because of either membership or non-membership in employee organizations.

33010.5.2 Exclusive Representatives

The Department recognizes and agrees to meet with designated stewards and staff of the exclusive representatives on the following:

- Administration of the contract.
- Employee discipline cases.
- Informal settlement conferences or formal hearings conducted by the Public Employment Relations Board.
- Matters scheduled for hearing by the Board of Control.
- Terms and conditions of employment.

Employee organizations requesting to meet and confer shall be expected to provide, in advance, an agenda or other detail of the items to be discussed to enable the representatives of the Department to prepare.

33010.5.3 Bona Fide Associations

The Department shall recognize other employee organizations providing they are registered and approved by DPA as bona fide associations.

A bona fide association is an organization that is comprised primarily of employees and former employees of agencies of the state and which:

- Does not represent state employees on matters within the scope of representation.
- Is not affiliated with an employee organization.
- Remains neutral in representational elections among state employees on the selection of an employee organization as an exclusive bargaining agent.

If an employee organization wishes to represent employees and there is some question regarding its status, the hiring authority shall contact the Labor Relations Office for clarification.

33010.6 Access to Work Locations

Reasonable access to employee work locations during working hours shall be granted:

- To employee organization officers and representatives on employment relations matters.
- Where specific problems exist which necessitate the officer/representative seeing the work location to understand the situation.
- Access to work locations shall not include visits for the purpose of solicitation of membership or routine contact.
- The restrictions or limitations shall be for legitimate state purposes, such as safety, security, potential work disruption, undue state costs, etc.
- No restrictions or limitations shall be applied, or not applied, on the basis of any antipathy or sympathy for or against employee organizations in general or particular.

Approval

Representatives shall obtain the approval of the appropriate official or their designee before entering an employee work location. Requests shall be made through the employee relations office. The appropriate officials are:

- An institution - Warden.
- P&CSD regional office - Regional Parole Administrator.
- P&CSD Headquarters - Deputy Director, Parole and Community Services Division.
- Headquarters - Assistant Director, Office of Labor Relations.
- P&CSD Field Office - Unit Supervisor.
- P&CSD CCF - CCFA.
- P&CSD Parole Outpatient Clinic - Chief Psychiatrist.
- PIA Central Office - General Manager.

33010.6.1 Barred Access

Each Warden shall prepare a list of work locations to which access for the purpose of contact with an employee shall be barred because of security reasons. The list shall be:

- Kept to a minimum consistent with institution security.
- Available at the office of the Warden for inspection by representatives.

Armed posts shall generally be excluded from visits by representatives.

A disagreement between an employee organization and a Warden as to reasonableness of denying access to any given location shall be referred to the Assistant Director, Office of Labor Relations for review and determination.

If a representative wishes to contact an employee assigned to a prohibited area, the meeting shall be arranged on the employee's own time unless the organization will furnish qualified relief acceptable to the institution. Overtime funds are not available to permit an employee to be relieved for consultation.

33010.6.2 Escorted Access

It is anticipated that employee organization representatives will be permitted access to most areas of the institution with the appropriate escort.

If escort is deemed necessary, the escort shall be the employee relations officer or a member of the management team.

Escort resources are limited and escorted visits shall be scheduled at institution convenience.

33010.6.3 Other Access

Contact with an employee on the job shall be in a manner that eliminates the possibility of incidents or breaches of security.

Representatives shall receive equal access treatment whether or not they are the Department employees.

Representatives, employees of the Department or not, are subject to all laws, rules, and regulations governing entrance to and behavior within a correctional institution/facility.

Employees may be allowed to engage in employee or organization business during working hours without loss of pay only when the business is specifically authorized by the appropriate MOU or DOM.

Employees' "own time" or "non-working hours" are lunch periods, regularly scheduled rest periods and time before and after work.

Access to a work location may be denied or delayed for reasons including safety, security, work load requirements, or other legitimate circumstances.

When access is denied, reasonable alternatives should be provided to allow representatives to communicate with employees (e.g., providing space in a cafeteria or elsewhere in the institution/facility).

If an employee representative requests meeting room space, an effort shall be made to comply with the request as long as space is available and the granting of the request will not violate any established rules, regulations, or policy.

33010.6.4 Trespass

See CCR (15)(3) 3289.

33010.7 Posting and Distribution of Information

Representatives may post, distribute, or place organization material in institution/appropriate parole office (district, unit, etc.) mail boxes when:

- Prior approval of the appropriate administrator or employee relations officer as listed in DOM 33010 has been received.
- The material does not advocate:
  - Unlawful or illegal activity.
  - Violation of departmental rules or regulations.
- Material is not obscene, defamatory, lewd, vulgar, libelous or slanderous.
- Such activities do not adversely affect institutional security or operation.

Approval to post or circulate material shall not in any way constitute endorsement by The Department of any of the statements contained in the material.

33010.8 U.S. Mail

The Department shall allow employee organizations to send U.S. mail to employees at work addresses and shall make every effort to deliver mail to employee mail boxes if:

- The mail is sent to the specific institution/parole office address.
- The volume of mail does not increase to the point that additional resources are necessary to process it.

33010.9 Use of State Facilities and Time

Uniform standards of treatment shall be applied to all employee organizations concerning the use of state facilities, equipment, and work time.

Employee organizations may be granted the use of state facilities for organization meetings composed of the state employees, provided such meetings are outside regularly scheduled working hours and space is available.

State time shall not be used for conducting or participating in employee organization business affairs including dues collection, organization meetings, and membership campaigns.

All services provided employees through any employee organization involving use of institution facilities, grounds, equipment, or inmates shall be approved in writing by the Warden.

Employees may, during assigned working hours, use a reasonable amount of state time to prepare and present grievances and to meet with management on issues and problems.

Time spent by representatives on representation activities shall not qualify for, or result in, overtime compensation.

33010.10 Release of Information

Non-confidential information pertaining to employer/employee relations shall be made available to representatives.

Each employee shall have the right to review the contents of his or her personnel file.

Review of any portion of an employee's personnel file by a representative requires written authorization of the employee.

The DOM, administrative bulletins, and other statement of policy, as well as copies of staff committee reports, are not confidential and shall be made available for review upon request.

In case of disagreement between an employee or employee organization and a representative of The Department as to the confidentiality of a given piece of information, the matter shall be referred to the Director through the Assistant Director, Office of Labor Relations.

33010.11 Grievance Procedure

Employees shall attempt to reach acceptable solutions to problems or complaints through informal discussion with their supervisor and if necessary the supervisor's supervisor.

Equal Employment Opportunity representatives are available to assist in resolution of issues on an informal basis.

If informal discussions fail to resolve the issue, a formal grievance may be filed as follows:

33010.11.1 Process

- Represented employees shall use STD. Form 630, Employee Contract Grievance, in accordance with the provisions of the appropriate MOU.
- Excluded employees shall use STD. Form 631, Excluded Employee Grievance, in accordance with procedures on the back of the form.

33010.11.2 Health and Safety Grievance

A health and safety grievance may be filed as follows:

- Represented employees shall file in accordance with the provisions of the appropriate MOU.
- Excluded employees shall use STD Form 631, in accordance with the procedures outlined on the back of the form. (Refer to DOM 31020.15.)

33010.12 Incompatible Activities and Outside Employment

See CCR (15)(3) 3413.

33010.13 Confidentiality of Employee Personnel Files

Information from employee personnel files shall be disclosed in accordance with the provisions of DOM 13040 and 13050 of this manual.

33010.14 Employee Housing

Employee quarters shall primarily be used to:

- Provide temporary housing for new employees while they seek permanent housing.
- House interns and trainees.

If necessary to vacate rooms for these purposes, the person(s) with the longest occupancy shall be asked to vacate.

DPA defines housing accommodations.

Monthly rental rates are determined by the DPA or by negotiation with the bargaining units.

Only those articles of household furnishings included in the "Maximum List of Basic Furnishings for Housekeeping Quarters to be Provided by the State," prepared by DOF, may be supplied to housekeeping apartments and homes.

33010.15 Vacation Credits

The limit on the number of hours that may be accumulated during a calendar year is established by:

- The appropriate MOU for represented employees.
- DPA rules for nonrepresented employees.

33010.15.1 Vacation Credit Carry-Over

Represented Employees

By June 1 of each calendar year, represented employees whose vacation balance exceeds, or could exceed by December 31, the vacation cap allowed by their MOU shall submit to their supervisor for approval a written plan to bring their vacation balance below the cap.

If an employee fails to submit a written plan or adhere to an approved plan, the employee's supervisor shall order the employee to take sufficient vacation to reduce the actual or potential vacation balance to below the authorized cap.

If it is unavoidable that the employee cannot use the scheduled time due to emergency, sick leave, or unanticipated operational needs, the employee shall be allowed to reschedule the time to be taken.

Non-Represented Employees

By June 1 of each calendar year, non-represented employees whose vacation or annual leave balances exceed, or could exceed by December 31, the vacation or annual leave cap permitted by DPA rules shall submit to their supervisor for approval a written plan to bring their vacation or annual leave balance to the amount permitted prior to January 1 of the following year.

If the employee fails to take off the required number of days/hours by January 1, the appointing power shall require the employee to take off the excess hours at the convenience of The Department during the following calendar year.

If it is unavoidable that the employee cannot use the scheduled time due to emergency, sick leave, or unanticipated operational needs, the employee shall be allowed to reschedule the time to be taken.

Non-represented employees whose vacation or annual leave balances exceed their maximum cap on January 1 shall not have the excess deducted from their balances.

33010.15.2 Catastrophic Leave Program

The Catastrophic Leave program was established in 1985 for excluded (non-reprensented) employees by DPA Rules 599.925 and 599.925.1 and in 1988 for represented employees by their respective bargaining unit contracts. Under this program, employees may receive paid leave donations if:

- They are suffering from an incapacitating illness/injury (nonwork related) and are financially burdened because they have depleted all of their accrued leave credits.
- They need to take an extended period of time off from work to care for an incapacitated family member and they are financially burdened because they have depleted all of their accrued leave credits.

- They are unable to work because of the effect of a natural disaster on their principal residence (in a county declared as a State of Emergency by the Governor) and they are financially burdened because they have depleted all of their accrued leave credits (excluding sick leave).
- They are taking extended time off after childbirth and are financially burdened, because they have depleted all of their accrued leave credits (excluding sick leave).

The following are general Catastrophic Time Bank (CTB) provisions; detailed procedures are outlined in the Personnel/Payroll Services Guidelines, Section D-100, located in the personnel office:

The Director has delegated authority to approve/deny CTB request and to review appeals as follows:

Division	**Initial Request**	**Appeals**
Executive Office	Chief Deputy Director	Director
Institutions	Warden	Deputy Director
P&CSD	Regional Adm	Deputy Director
Legal Affairs	Asst. Chief Counsel	Deputy Director
Planning & Construction	Asst. Deputy Director	Deputy Director
Administrative Services	Asst.Deputy Director	Deputy Director
Health Care Services	Asst. Deputy Director	Deputy Director

- To establish a CTB, a CDC Form 868, Catastrophic Time Bank (CTB) Request shall be completed and submitted to the employee's local personnel office by the employee or the employee's representative if the employee is incapacitated. All requests to establish a CTB are subject to DPA laws and rules/contract provisions. Note: CTB requests shall not be processed without the consent of the employee or the employee's representative; this is to protect the employee's right to privacy.
- Upon receipt of the CTB request, the approval authority has five working days in which to review the request, approve/deny the CTB, and forward the form to the appropriate local personnel office.
- The approval authority shall name the person(s) designated to advertise for donations at the time the CTB request is approved. The responsibility may be delegated to a single individual or several persons.
- To make CTB donations, employees shall complete and submit a CDC Form 869, Catastrophic Time Bank Donation Authorization to the CTB recipient's personnel office. All CTB donations from nonrepresented employees are subject to their contract provisions. Exceptions to the DPA laws and rules/various contract provisions must be requested and approved in accordance with the Personnel/Payroll Services Guidelines, Section D-100.
- If there is an indication of a substantial change in the nature of the illness/injury, the local Return-to-Work Coordinator or Medical Officer (on a case-by-case-basis), may be contacted by personnel office staff. The Return-to-Work Coordinator/Medical Officer shall then contact the recipient/representative within three working days to obtain the medical status of the ill/injured person, verify the continued need for CTB leave, and notify the local personnel office when a decision is reached.
- CTB donations shall not be used to augment any benefits received due to a work-related injury or illness.
- Personnel office staff shall direct all questions regarding appeals to the headquarters Labor Relations Office.
- In all cases where the CTB recipient dies, donations shall not be accepted unless dated and signed on or before the date of death of the recipient. All unused donations received through the date of death of the recipient shall become part of the recipient's estate.
- Upon expiration of the CTB for a reason other than death, all unused donations shall be returned to donors on a last received first returned basis, 60 days after the employee returns to work.

33010.16 Employee Holidays

Holidays to which all employees are entitled are as follows:

- First day of January.
- Third Monday in January.
- Twelfth day of February.
- Third Monday in February.
- Last Monday in May.
- Fourth day of July.
- First Monday in September.
- Second Monday in October.
- Eleventh day of November.
- Last Thursday in November.

- Day after Thanksgiving.
- Twenty-fifth day of December.
- Day chosen by an employee (Personal Holiday).
- Every day appointed by the Governor of this State for a public fast, Thanksgiving, or holiday.
- When a holiday falls on a Sunday, the following Monday shall become the holiday.
- If November 11 falls upon a Saturday, the preceding Friday shall be the holiday.

Refer to the MOU as it shall be the controlling factor if the provisions of GC 19853 are in conflict with the bargaining agreement.

The legal holidays may be observed or celebrated in the institutions, in accordance with approved practices. This does not imply that all legal holidays shall be observed by work stoppage or special programs for the inmate population.

33010.16.1 Holiday Time Credit

Holidays falling on an employee's day off shall be credited to an employee pursuant to current administrative practices, contract MOU provisions, and consistent with GC 19853.

Special holiday pay provisions for employees working shifts other than Monday through Friday, who work on holidays, are specified in the Personnel Transactions Manual Section 656 and the MOUs.

33010.17 Exchange of Duty Assignments

Employees in custody and medical technical assistant classifications, assigned to watches and/or by post assignment, may be permitted to exchange hours and/or days of work with other employees of the same classification (SWAPS).

Process

Employees in other classifications may be permitted to exchange hours and/or days of work if allowed by their bargaining unit MOU.

SWAP requests shall be:

- Submitted 24 hours in advance.
- Signed by both employees.
- Approved by immediate supervisor(s).
- Completed within three months.

Employees exchanging SWAPS shall not be entitled to any additional compensation that they would not otherwise receive.

For example:

- Overtime.
- Overtime meals.
- Holiday pay/credit.
- Shift differential.

33010.17.1 Employee Responsibility

Employees shall be responsible for work assignments they accept.

Failure to report for SWAPS shall:

- Result in administrative action.
- Result in ineligibility for SWAPS for 90 days.
- Require a physician statement of illness and/or treatment if absence was for medical reasons.

33010.18 Watch Assignment Preference by Seniority

Watch assignment preference by seniority shall:

- Apply to Lieutenants, Sergeants, and Officers.
- Apply to 60 percent of the positions on each watch.
- Not apply to camps and Community Correctional facilities.
- Post assignments by each watch shall be at management's discretion.

The following Lieutenant positions shall be exempt from watch preference:

Personnel Assignment.

In-Service Training.

Public Information Officer/Administrative Assistant.

Investigations.

Assignment of probationary employees shall be based on their training needs. The Public Information Officer position requires the participation of the Assistant Director, Communications Division, in the selection/interview process.

Watch preference shall be based on the lieutenant’s seniority within the classification at the time of the request. Participation is voluntary and those who elect to participate must submit their request to the Custody Captain by November 30 of each year. Lieutenants shall be placed into the designated available assignments by watch in February of each year. All assignments shall be published on the Custody Personnel Movement Sheet.

Relief position determination shall be based on the watch in which the majority of work shifts occur. For example, two Second Watch shifts and three Third Watch shifts is considered a Third Watch assignment.

Lieutenants removed from an administratively assigned position shall be assigned at the discretion of the Warden. However, the assignment may not result in the displacement of a Lieutenant who was assigned to the watch by seniority bid.

Lieutenant assignment rotations shall occur in two year intervals. Exceptions to the two year rotation may be made by the Warden for operational necessity. Retention of a Lieutenant in a specific assignment beyond four years shall be approved in writing by the respective Regional Administrator.

Lieutenant positions outside the institutions, such as Camp Commanders, Background Investigations, etc., shall be filled by an impartial and competitive hiring process.

33010.18.1 Rosters by Seniority

- Each institution shall maintain a seniority roster of:

Lieutenants.

Sergeants.

- Officers.
- Probationary Lieutenants.
- Probationary Officers.
- Probationary Sergeants.
- Permanent Intermittent (PI) Officers.
- Watch assignments.

33010.18.2 Seniority Status

The Officers' (including intermittent employees) seniority shall be in accordance with MOU, Bargaining Unit 6.

Seniority for employees (including intermittent employees) in all other bargaining units shall be in accordance with their respective MOU.

Sergeant and Lieutenant seniority shall be based on:

- Total continuous service in class (employees who accept a transfer to a non-custody classification, but do not leave The Department, will receive credit for the previous seniority earned upon return to their former classification) or, in the event of tie;
- Total continuous service in class combined with continuous total state service or, in the event of tie;
- The highest figure as determined by the last four digits of the employee's social security number.

A break in state service of 12 months or more shall result in loss of all seniority credits.

33010.19 Permanent Intermittent Requirements

Each institution shall maintain a roster of PI Officers.

The number of hours a PI may work may be increased to ensure that the institutions have sufficient PIs to cover their needs. To exceed 1,500 hours in any calendar year, requires written departmental approval.

33010.20 Seniority for Vacation Scheduling

Vacation scheduling for rank and file employees shall be in accordance with their respective MOU for the bargaining unit.

Vacation scheduling for excluded employees and rank and file employees, when not specifically addressed in their MOU, shall:

- Be by seniority in grade (i.e., total service in classification at any institution/facility or office).
- Be consistent with the needs of the institution/facility.
- Ensure an adequate work force to maintain the security and operation of the institution/facility or parole region.

33010.21 Employee Opportunity Transfer

The Department recognizes the benefit of allowing represented employees the opportunity to make voluntary lateral job transfers.

The needs of the State shall be given first priority when a vacant position is filled. The needs include, but are not limited to:

- Special skills.
- Abilities.
- Aptitudes.

The Department shall have the right to fill vacant positions using the existing eligible or promotional lists, voluntary or involuntary transfers, reassignments, or other selection methods.

Process

Employees desiring interdepartmental transfer shall submit a CDC Form 923, Employee Opportunity Transfer Application, with a STD Form 678, State Application Form, attached. Request shall be in compliance with the appropriate MOU.

When a hiring authority elects to fill a vacancy through a transfer, the selection shall be as specified in the appropriate MOU.

The effective date of transfer shall be agreed upon by the sending and receiving hiring authority, but no later than 30 days following approval.

Time Credits

When transferring employees have an accumulation of compensating time off, holiday credits, or other administrative time, the employee should be allowed to use this time prior to transfer. If it is not possible, the employee shall be allowed to transfer credits.

Use and/or transfer of credits shall be agreed upon by the sending and receiving hiring authority.

Incidents affecting the employees' performance occurring between the time of transfer approval and the transfer date shall immediately be brought to the attention of the receiving hiring authority.

Adverse Action Pending

The Chief of the Labor Relations Branch shall review and approve any request for transfer of an employee who has an adverse action pending.

33010.21.1 Probationary Officer Hardship Transfer

The Officer shall complete probation at the institution/facility to which they were first assigned except those Officers who demonstrate a hardship may be considered for transfer to another institution/facility.

Wardens at the sending and receiving institution may refuse to approve a hardship transfer request.

A hardship transfer shall only be allowed when the following criteria have been met:

- Circumstances creating the hardship developed after the Officer reported to the Academy.
- Circumstances are related to the employee's immediate family (including spouse, children, step-children, parents, parents-in-law) residing in the employee's immediate household.
- Circumstances involve health or personal problems expected to continue for at least 90 days.
- Circumstances have been documented by physician's statement or other official records.
- Alternatives to the hardship transfer have been explored and determined to be not feasible.
- The Warden at the receiving institution reviewed the employee's personnel file and is willing to accept transfer, subject to the availability of a suitable job opening.

Hardship transfers occurring within the probationary period require the approval of the Deputy Director, Institutions Division.

33010.21.2 Other Probationary Employees

Generally, transfer requests shall only be considered if the employees have permanent status in their present classification. This allows:

- The employee to demonstrate he/she can satisfactorily perform the duties of the class in which he/she is are erving probation prior to being moved to different surroundings and new supervisors.
- Opportunity to consistently evaluate the employee's work performance and his/her ability to perform the work of the class.

Requests shall be reviewed to determine if it is preferable to delay transfer until completion of probation.

Wardens at either the sending or receiving institution may refuse such transfer.

For employees transferred in current probationary class, the length of probation remains unchanged.

- If the requested transfer is to another class, the employee shall meet the standards governing transfers between civil service classes.
- Serve a new probationary period unless waived by the hiring authority under provisions of the GC.

33010.22 Involuntary Transfer

An appointing power may involuntarily transfer employees to vacant positions (under the jurisdiction of the Department to deal with Budget reductions and the impact of resulting layoffs, changes in office function or location, reorganization, or the activation of new work sites (e.g., parole offices, facilities). There may be additional causes, however the decision to implement involuntary transfers as a solution are management-initiated and may be in the same or a different geographical location. When such a transfer reasonably requires an employee to change residence, the appointing power shall give the employee written notice of transfer 60 days prior to the effective date of the transfer. Departmental policy prescribes that an employee subject to an involuntary transfer which does not require a change in residence shall be given 30 days advance notification.

33010.22.1 Authority

GC:

- GC 19841 provides the right to moving and relocation expenses when all criteria are met.
- GC 19050.5 states that involuntary transfer of an employee may be made to a different classification under the jurisdiction of the appointing power, however, advance approval of the SPB is required.
- GC 19994.1 states that 60 days written advance notice of involuntary transfer is required, unless the employee waives this right, when a change in the employee's residence is reasonably required.
- GC 19994.2 states that the DPA may determine the method by which employees are selected for involuntary transfer when two or more employees are involved.

State Personnel Board:

- SPB Rule 434 describes involuntary transfer between classification: When the transfer between classifications is not voluntary on the part of the employee, the classification to which the employee is transferred shall have prior executive officer (SPB) approval.

DPA:

- Rule 599.714 defines "reasonably required to relocate" as stated in GC 19994.1. The employee is reasonably required to change residence, and therefore, receives 60 days advance written notice of involuntary transfer, when the following criteria are met:
    - At least 35 miles between the old headquarters and the new headquarters.
    - At least 35 miles between the old residence and the new headquarters.

Regardless of whether the employee chooses to change residence, a 60-day written advance notice must be given when the above criteria are met.

Additionally, an employee is entitled to moving and relocation expenses when all of the following criteria are met:

- At least 35 miles between the old headquarters and the new headquarters.

- At least 35 miles between the old residence and the new residence.
- At least 35 miles between the old residence and the new headquarters.
- The new residence shall not be farther from the new headquarters than the old residence is from the new headquarters.

For further information on moving and relocation expenses, contact the Department Travel Coordinator in the Accounting Services (AS) Section.

MOU:

If this policy is in conflict with a MOU reached pursuant to GC 3517.5, the MOU shall be controlling without further legislative action, except if the MOU requires the expenditure of funds, it shall not become effective unless approved by the Legislature in the annual Budget Act.

- Unless addressed in existing MOUs for represented employees, an involuntary transfer is a change in the conditions of employment and therefore is subject to negotiation.

33010.22.2 Policy, Standards and Guidelines

General Policy

It is the policy of the Department to minimize employee hardship resulting from management-initiated organizational changes by attempting to accommodate such employees via voluntary means prior to involuntary means.

A "Notice of Involuntary Transfer" will be issued only after the Department has attempted to place the employee through the Departmental Restriction of Appointments (DROA) process (when practical*). The DROA process is administered by the Office of Personnel Management (OPM)/Personnel Operations Section (POS) headquarters. The employee(s) is informed in writing of his/her surplus status in the Department and the available options are explained. For further information on the DROA process, contact POS.

A department may place its employees on the State Restriction of Appointments (SROA) list and designate them as surplus only when DPA has recognized that the department is in a layoff mode. Placement on the SROA list is limited by DPA Rule 599.854.1 to those employees who are actually subject to layoff or demotion in lieu of layoff. Employees facing involuntary transfer do not meet the aforementioned criteria and therefore are not eligible for SROA.

- *In the event of an office closure (e.g., Parole Office, Facilities), program abolishment, or downsizing, the time involved to offer the DROA process to the affected employees may not be practical. The impending closure of an office, program abolishment, or downsizing may necessitate that the involuntary transfer process be initiated immediately. However, this type of urgent need should be rare. Office closure, program abolishment, or downsizing should be a well-planned management decision which includes the appropriate amount of lead time to effectuate employee placement and give optimum advantage and opportunity to the affected employee(s). A minimum of 90 days advance written notice to POS will ensure sufficient time for preparation.

33010.22.3 Responsibilities

Organization

The organization (e.g., parole region, facility) experiencing the budget reduction, closure of an office, deactivation, etc. provides OPM/POS with a written notice describing the cause of the surplus and need for involuntary transfer and sends a copy to the Labor Relations Branch (LRB) and the AS Section. The classifications and the names of all employees holding appointments in those classifications shall be listed. Any special circumstances surrounding the need for involuntary transfer should be explained. A contact person from the organization shall be identified to act as liaison between the organization and POS on the process. CDC Form 1822, Involuntary Transfer Worksheet, and Request to Implement Involuntary Transfer Process are to be completed and attached to the memorandum to OPM/POS. It is imperative that OPM/POS be notified as soon as the anticipated involuntary transfer of employees is realized. Ninety days advance written notice will ensure sufficient time for POS to effect the involuntary transfer of surplus staff. This advance notice will relieve the organization of their surplus situation in a timely manner.

Personnel Operations Section

Upon receipt of written notice of an anticipated need to involuntarily transfer employees, POS staff will review the request, outline the process, and meet with organization staff to discuss the process.

There may be specific bargaining unit (BU) requirements, seniority calculations, or other considerations to be made prior to the movement of employees. It is essential to carefully review the current MOU for the method of seniority calculation to be used for involuntary transfer.

The need to involuntarily transfer employees often varies in that a "surplus" of employees may or may not require that the seniority of all employees in the classification is calculated to ensure that the least senior employees are transferred.

Following are conditions under which involuntary transfer may be necessary:

- There are 50 employees in the classification of Office Assistant (OA) (Typing) (T) and the program has 50 authorized budgeted OA (T) positions. The program is required to reduce their OA (T) positions by 10 percent which equates to five positions. In order to identify the five least senior employees who will be subject to involuntary transfer to vacant OA (T) positions elsewhere in The Department, seniority must be calculated for all 50 employees. POS will order seniority from DPA and effectuate the involuntary transfer of the five least senior employees.
- The closure and movement of an office.
- A field office is being closed due to the conclusion and nonrenewal of the lease. Another office in another location has been obtained and leased for a lesser cost. Transferring the employees to the new office location would not necessitate seniority calculations, as long as all the employees are being transferred to the same location (new office). However, the employees and affected unions must be given notice consistent with policy, applicable laws, and MOUs. POS would initiate the notices.
- Abolishment of a program.
- A vocational program is abolished. There are two positions and both are filled. This classification is used elsewhere in the Department. The classification is frozen through the DROA process.
    - POS staff and the Institutional Personnel Officer explore options available to the affected employees such as voluntary transfer to other classifications.
- If there are other vacant positions in this classification in the Department, POS will order seniority scores from DPA and implement the involuntary transfer of staff. If the vacant positions exist in separate locations, the most senior employee is offered first choice.
- POS prepares and assures the delivery of CDC Form 1822, in accordance with this policy, applicable laws, MOUs, or other negotiated agreements between the State and the unions.

Labor Relations Branch

The LRB receives a copy of the initial notice sent to OPM/POS of the possible involuntary transfer of employees. The LRB staff reviews any MOU restrictions or requirements with regard to those represented employees affected by an involuntary transfer. Notification of the union(s) is made by LRB staff. If requested by the union, a meet-and-confer on impact will be scheduled. A coordinated effort between POS and LRB is essential to effectuate a smooth transition of affected employees.

Accounting Services Section

The AS Section receives a copy of the initial notice sent to OPM/POS of the possible involuntary transfer of employees. The AS Section will address any concerns of the employee(s) regarding claiming relocation and moving reimbursement after CDC Form 1822 has been delivered. Upon authorization for the move, the AS Section will send a moving and relocation package to the employee. The STD Form 255, Moving Service Authorization, is included in the package to the employee.

The employee may receive relocation payment or reimbursement of actual and necessary moving, traveling, lodging and meal expenses when the employee is required to change residences, as a result of an involuntary transfer for the advantage of the State or a transfer in lieu of layoff.

The actual and necessary relocation expenses incurred by a relocating employee, both before and after the change of residence, are defined and controlled pursuant to the SAM 0721 through 0774, 3800 through 3885, 8572.1 and DPA Rules 599.714 through 599.724.

Actual and necessary moving expenses include the following (the amounts are subject to change; consult with the AS Section for current per diem rates, etc.):

- Meals, lodging, and incidental expenses while locating a permanent residence at the new headquarters within the limits of DPA Rules 599.721 and 599.722. Relocation per diem is allowed up to a maximum of 60 days and shall terminate immediately upon establishment of a permanent residence.
    - The BU contract should always be referenced to obtain per diem and other expense allowances at the time the transfer is to be made.
- Although some expenses do not require receipts in order to receive reimbursement, the employee should retain sufficient documentation as proof that the amounts claimed do not exceed actual expenses in the event they are audited by the Internal Revenue Service.
- Movement of household goods are allowed within the limitations of DPA Rules 599.718 and 599.719.
- Expenses incurred for dissolution of the household and/or establishment of the new household are allowed in accordance with DPA Rule 599.715.
- Expenses incurred for the actual and necessary cost to sell a residence will be reimbursed as determined by prevailing practices within the area of the sale and within the limitations of DPA Rule 599.716.
- The settlement of an unexpired lease agreement up to the maximum of one year will be reimbursed within the limitations of DPA Rule 599.717.

When involuntary transfer is utilized in lieu of employee layoff and/or due to budget reductions, the Department may negotiate a lesser relocation package than the procedures listed above. The above procedures and rules are governed by DPA, SAM, and the employee's BU contract; however, the Department has the discretion to modify or eliminate certain portions of the relocation expense reimbursement with the agreement of DPA and the appropriate BU. An example of a modified package may include 30 days of per diem expense, 30 days of storage, movement of household goods, and the elimination of the sale of residence reimbursement.

Upon receipt of a Std. Form 262, Travel Expense Claim, the AS Section will process the claim within 30 days.

Employee

The employee may waive the 30-day or 60-day notice and choose to report to the new headquarters at an earlier date; however, no employee shall be coerced or forced to waive his/her right to such notice. Employees shall be assured that they will not be subject to reprisal, if they do not waive this right. An employee has the right to file an appeal with DPA, if he/she believes the involuntary transfer is being made for the purpose of harassment or discipline.

An employee faced with involuntary transfer cannot elect to voluntarily demote and displace a lower senior employee in order to remain at the "old headquarters."

An employee who refuses an involuntary transfer may seek a permissive transfer to another agency; seek a permissive transfer to a vacant position in the Department; resign in lieu of the transfer; or retire, if eligible. If the employee fails to report to the new headquarters as instructed, he/she may be separated (Absent Without Leave {AWOL}) five working days after the effective date of the involuntary transfer (in accordance with the California Supreme Court decision Coleman vs. DPA and General Services), or be subject to other types of adverse action.

For BU 6 employees, the MOU recognizes additional procedural steps when processing an AWOL separation. Therefore, the Department may elect to use the Adverse Personnel Action procedures to process an AWOL separation for BU 6 employees. When making a determination as to which process to use, program staff should consult with LRB and POS for guidance.

33010.23 Examination Application Acceptance Policy

Examination bulletins publicize final filing dates designed to allow a reasonable time for interested persons to file an application on or before the final filing date.

Strict adherence to filing dates is required by the SPB.

Applicants are encouraged to file early to ensure timely receipt of their applications.

33010.23.1 Timeliness Determination

If a mailed application is received after the final filing date, the cancellation date stamped on the envelope by the post office is used to determine whether the application was mailed on or before the final filing date. The applicant shall ensure the application is postmarked on or before the final filing date.

Applications placed in interdepartmental mail and not received on or before the final filing date shall be considered to be LATE applications. To avoid this, mail at a post office and obtain a certificate of mailing receipt. This is acceptable proof that the application was submitted timely.

Following are the conditions under which late applications typically shall not be accepted:

- The applicant claims hey/she did not see the bulletin because of distribution problems within the reporting unit.
- The applicant gave an application to another person to turn in to the office that is administering the examination, but it is not received on or before the final filing date.

- The applicant claims the application was mailed, placed in interdepartmental mail, or hand-delivered to the Personnel Examining Unit or the local testing office on or before the final filing date.
    - A late application may be accepted under this condition only if the applicant has a written statement from a post office official or other witness who verifies the application was mailed on time.
- Application is postmarked after the final filing:
    - If the post office verifies, in writing, this was caused by post office error, the application shall be accepted.

Following are the conditions under which late applications may be considered:

- The hiring authority verifies in writing that the examination bulletin was not received by the local testing unit because of bulletin distribution problems and prevented the employee from being properly notified.
- The unit manager verifies the employee was away from his/her work during the entire publicity period.
- The application delay was caused by Personnel Examining Unit or field office staff error (for instance, an application was returned to an applicant in error).
- The application was submitted in error to the SPB or to another state department's Personnel Office and was either postmarked on or before the final filing date or date stamped by that department's personnel office.

33010.23.2 Examination Bulletin Distribution

Examination bulletins are sent to all reporting units in the Department's Central Office (including off-site units), institutions, and parole offices.

The local manager shall ensure all examination bulletins are posted in a place visible to all employees.

Employees shall be responsible to keep themselves informed of testing for classes currently being administered.

33010.23.3 Testing Information

Current testing information is available from the following sources:

The Department's Examination Line (916) 322-2694.

Telecommunications Device for the Deaf (TDD) relay service for the deaf or hearing impaired, TDD 1-800-342-5966.

Voice TDD 1-800-342-5833, TDD (916) 324-6317 or CALNET 454-6317.

Entry level peace officer classifications; Officer, PA-I, MTA, and CC-I are administered by Selection and Standards Branch (916) 227-2110.

PIA Testing information (916) 358-1773 or CALNET 434-1773.

SPB's examination recordings, limited examinations, and other general employment information:

- Los Angeles (213) 620-6450.
- Sacramento (916) 445-0538 or CALNET 485-0538.
- San Diego (619) 237-6163.
- San Francisco (415) 557-7871 or CALNET 597-7871.

33010.24 Reduced Worktime Policy

The Department shall make available, to the extent feasible, reduced worktime to requesting employees.

Employees shall submit a request to the appropriate hiring authority.

The hiring authority shall make a written response within 30 days either granting approval or explaining why reduced worktime is not feasible.

33010.24.1 Impact Consideration

Reduced worktime schedules may impact:

- Costs.
- Service to public/clients.
- Health and safety.
- Administrative considerations.
- Supervision.
- Span of control.
- Workload.
- Other factors.

Planning and scheduling may minimize or eliminate the impact, and the request may be feasible.

When impact is of significant extent, and planning and scheduling does not alleviate the impact, the requests may not be feasible.

33010.24.2 Peace Officer Exclusion

Employees in peace officer classifications shall be precluded from reduced worktime provisions.

33010.25 Nepotism/Fraternization

Staff shall not use their personal relationships to aid or hinder others in the employment setting.

For purposes of this section, relationships include, but are not limited to, an association with another individual by blood, adoption, foster arrangement, cohabitation, current or previous marriages (including in-laws), or any other relationships which create a conflict between the private interests of the employer and his/her public obligations.

Appointments/Assignments

An employee in a relationship, as defined above, with another Department employee shall not be appointed or assigned where such a relationship would adversely affect or influence:

- Safety, security, or morale of employees of a program, section, or unit.
- Fair and impartial supervision and evaluation of employees.

Employees involved in such relationships may work in the same program, section or unit. However, appointments or assignments shall not be made where the employee would:

- Work for the same supervisor.
- Have a direct (first line supervisor), or indirect supervisory relationship (second line supervisor).
- Audit the work of, or exercise fiscal control over that person with whom they have a relationship, regardless of organizational separation.
- Participate in the development and/or administration of an examination or hiring interview of that person.
- Work in a program, section or unit within close proximity of each other.

Responsibilities

Employees shall immediately notify the hiring authority or their respective supervisor when working arrangements and/or assignments are in conflict with the nepotism/fraternization policy.

The hiring authority or supervisor must inform candidates of the nepotism/fraternization policy at the time of the interview. Exceptions to this policy may be granted under limited circumstances. The hiring authority or supervisor is responsible for requesting an exception to the policy (refer to Exception Procedure Guidelines). Recruitment, hiring and/or promotional decisions will not be based upon marital status.

The hiring authority, managers and supervisors must ensure their employees are aware of the departmental nepotism/fraternization policy. Additionally, the hiring authority, managers, and supervisors must take appropriate action to correct violations of this policy. This may require reassigning one of the employees, or requesting an exception to the policy.

Exception Procedures Guidelines

When the appointment of a candidate would violate the departmental nepotism/fraternization policy, the hiring authority, manager, or supervisor must submit a request for exception, and receive approval prior to extending a job commitment.

The exception procedure guidelines are as follows:

- A written request that clearly defines the relationship, and the benefit(s) to the state such an exception would provide (e.g., overcoming a recruitment difficulty or obtaining a uniquely skilled person). This request shall be submitted through the immediate supervisor to the appropriate supervisory level (Chief, Manager, Associate Warden, etc.) of the affected area, section, unit, or division(s) for first level review. Should the exception involve a person(s) reporting directly to the first level reviewer, the next highest ranking official shall review the request for exception and render a decision. All requests for exception shall be submitted to the highest ranking administrator of the affected area, section, unit or division (e.g. Warden, Regional Administrator, Assistant Deputy Director, etc.) for final approval.
- Each exception request shall be reviewed to assess the potential for, and degree of impact upon the following:
  - Safety, security and morale of the employees;
  - Fair and impartial supervision and evaluation of employees by the supervisors in the program, section, or unit.
- A written response to the exception request will be completed within ten (10) working days. A copy of the response shall be forwarded to the appropriate level personnel officer and Employee Relations Officer.
  - If the exception request is approved, the personnel officer shall place a copy of the approval in the respective employee personnel file.
- If the exception request is denied, a written explanation of the basis for the denial, including notification to the employee of his/her appeal rights per established procedure, shall be provided to the employee. A copy of the denial document(s) shall be forwarded to the appropriate personnel officer and placed in the respective employee personnel file.

Current Employees

Managers and supervisors shall ensure their employees are aware of the departmental nepotism/fraternization policy, and shall take appropriate action to correct violations. When management becomes aware of employment that violates this policy, the supervisor(s) of the involved employee(s) shall either reassign one of the employees, or request an exception to the policy following the exception procedure guidelines.

For current employees, the exception procedure guidelines shall be used with the following modifications:

- If the exception request is denied, the denial shall include a written explanation of the basis for the denial. The denial explanation shall additionally notify the employee of his/her right to file a complaint in accordance with the established procedure. The personnel officer shall place a copy in the respective employee personnel file.

If the exception request is denied and reassignment of an employee is necessary, every effort shall be made to avoid relocation expenses. If an employee must relocate his/her household to meet the department's nepotism/fraternization policy, the Department shall pay any associated relocation expenses. (refer to the DPA Rules and Regulations.)

33010.26 Prohibition of Personal Influence

Employees shall not use their personal influence to aid or hinder any individual in any phase of a civil service examination or hiring process because of a family or close personal relationship.

Employees shall not:

- Participate in the hiring or promoting of any person with whom they have a close personal relationship.
- Aid or hinder any individual in any phase of a civil service examination or hiring process because of such relationship.
- Defeat, deceive, or obstruct any other person's right of examination, application, or employment.

- Willfully and falsely mark, grade, estimate, or report upon the examination standing of any person examined or certified.
- Furnish any person with information improving or injuring chances of that person's examination or application.
- Practice deception or fraud with regard to any person's identity in connection with any examination, application, or request to be examined.
- Obtain examination questions/materials before, during, or after an examination for purpose of preparing candidates for examinations.
- Use unfair means to cause or attempt to cause any eligible to waive any rights under these regulations.

33010.26.1 Appearance of Improper Influence

To avoid the appearance of improper influence, employees with such a relationship to any competitor shall not participate in any phase of the examination process including but not limited to:

- Planning.
- Question development.
- Preliminary Review Committee (PRC).
- Oral interview panel.
- Serve as a rating or reviewing supervisor of the competitor.
- Participate in discussions or ratings of the competitor.

If an employee serving on a PRC, oral interview panel, or participating in the discussion or rating of competitors finds one of the competitors is one with whom he/she has a family or close relationship, the employee shall leave the room and not participate in the interview, observation, discussion, or rating of that competitor.

If an employee serving in any capacity discovers a competitor is one with whom he/she has a family or close relationship, the employee shall contact Selections and Standards Section for direction.

Employees selected to participate in the State Civil Service examination process shall maintain the competitive and confidential nature of the examination process. Disregard for examination integrity can result in examination appeals from the candidate group and may ultimately be grounds to void an examination.

Violation of the provisions of this section:

- May be a misdemeanor.
- Shall be cause for adverse action.

33010.27 Service Awards

Pursuant to GC 19849.9, employees completing 25 or more years of State service and retiring employees who have at least 25 years of State service as of the effective date of their retirement qualify for a service award consisting of a framed certificate and their choice of any one of the items offered by and described in the catalog provided by the contracting vendor.

Employees who are being awarded under this program shall be presented a memento within one year of completion of 25 years of State service or within 60 days of their retirement date.

33010.27.1 Personnel's Responsibility

The local personnel office shall:

- Notify the unit timekeeper/supervisor via a CDC Form 1785, Service Award Eligibility Notification, of employees who are within at least 2 months of attaining 25 years of State service or who have 25 years of State service as of the effective date of retirement and are qualified to receive a retirement memento.

33010.27.2 Supervisor's Responsibility

The employee's supervisor shall:

- Make the contracting vendor's catalog available to the employee.
- Arrange for the ordering of a selected award/memento from the contracting vendor as follows:

Headquarters and Parole and Community Services Division

Submit a CDC Form 954, Intraoffice Requisition (Local) to the Business Services Section. A copy of CDC Form 1785 shall be attached to CDC Form 954. All orders shall include the information outlined under "Ordering Instructions" in the vendor's catalog.

Institution/Facilities

Supervisors are responsible for ensuring the award is ordered according to the institution/facility's established procedure.

- Prepare a 25-year service anniversary/retirement letter for the Director's signature.
- Submit the letter through the chain of command to the appropriate Warden, Regional Parole Administrator, Health Care Manager or Deputy Director for signature.

33010.27.3 Manager's Responsibility

The appropriate Deputy Director, Warden, Regional Parole Administrator, Health Care Manager or his/her designee shall:

- Check with the following offices to ensure the proposed 25-year anniversary or retirement letter accurately reflects the employee's employment record with the Department, including prior positions:
    - POS (for prior or pending adverse actions against the employee).
    - LAD (for prior or pending legal actions in which the employee is a plaintiff or defendant).
    - OIA (for pending or prior internal affairs investigations where the charges against the employee were sustained).

- OEHSM (for prior or pending workers' compensation litigation).

- Every employee who completes 25 years of State service or retires from the Department shall receive the appropriate letter (an employee who is retiring will also receive a goldenrod identification card). However, the letter shall be personalized, meaningful and relevant. For example, the letter for an employee who retires because of a disability should contain this information and should be consistent with the employee's length of State service and the circumstances of the retirement (without specifically stating the nature of the employee's disability). If an employee recently has been formally disciplined (i.e., with a formal reprimand, suspension, demotion or reduction in pay) for misconduct, the letter should simply acknowledge the retirement or completion of 25 years of service. An employee who has made significant contributions to the Department and/or who has an exemplary employment record should be recognized in the letter.
- Prepare an appropriate transmittal memorandum and forward the memorandum with the letter for the Director's signature (and retirement identification card if applicable) to the Assistant Deputy Director, OPM. The transmittal memorandum shall include a certificate signed by the Institutional Personnel Officer or another management employee.

33010.27.4 Standards

A retirement and service anniversary letter shall receive careful consideration to ensure it is a personalized, meaningful, and relevant document that demonstrates appreciation and respect for the employee's years of service.

Letters shall be prepared for the Director's signature and be consistent with procedures outlined in the Secretarial Handbook Section 2-3000.

Letters shall contain information on the employee's:

- Service history.
- Pertinent work history.
- Appropriate biographical information.

33010.27.5 Retirement Resolution

Upon request from the employee or the employee's unit, the local personnel office shall order a retirement resolution from the Secretary of State's Office and shall forward the resolution to the employee's unit or home address.

The following information is needed to complete the resolution:

- Name of retiree.
- Total State service (number of months).
- Year State service began.
- Initial title or position with the State.
- Initial Department.
- Title and Department at time of retirement.
- Indicate luncheon or dinner if applicable.
- Date of event if applicable.
- Date of presentation.

33010.28 Presentation

The hiring authority shall provide for appropriate presentation of letters, certificates, resolutions, and service awards.

33010.28.1 Employee Retirement and Death Benefits

PERS provides retirement or death benefits that could be applicable to an employee. For more specific information, the following pamphlets are available from your local personnel office or PERS:

- PERS Benefits for State Miscellaneous Members.
- PERS Benefits for State Industrial Members.
- PERS Benefits for State Safety Members.
- PERS Benefits for State Peace Officers/Fire Fighters.

Retirement information includes:

- Service credit.
- Eligibility.
- Allowance formula and calculation.
- Final compensation.
- Optional settlement with survivor continuance.
- Estimates.
- Health insurance.

33010.28.2 Disability Retirement

State Miscellaneous members with five years of service are eligible to apply for disability retirement if they cannot work because of illness or injury.

State Industrial, Safety, Peace Officer, and Firefighter members may apply for:

- Disability retirement if illness or injury is nonjob related. (Member needs a minimum of five years of service.)
- Industrial disability retirement if illness or injury is job related.

33010.28.3 Social Security

Employees/survivors shall contact the local social security office to determine what benefits may be available under that program.

33010.28.4 Public Safety Officers' Benefit Act Of 1976

Law Enforcement Assistance Administration (LEAA) is authorized to pay a $50,000 death benefit to the eligible survivor of a public safety officer who died as a "direct and proximate result of personal injury sustained in the line of duty."

Claims are filed by the Department on behalf of the survivor, but the survivor may elect to file directly to LEAA.

33010.28.5 Term Life Insurance

A State sponsored term life insurance policy is available to certain excluded employees below the age of 70.

Enrollment is automatic for eligible employees.

Additional information is available through the local personnel offices and DPA.

33010.28.6 Other Benefits

GC 13959 through 13969.1 provide benefits and assistance to victims who sustain injuries or death as a result of a crime or violence.

GC 13970 through 13974 provide benefits to private citizens who incur injury, death, or property damage under the following circumstances:

- In the course of preventing the commission of a crime against another person or property.
- In apprehending a criminal.
- In assisting a peace officer in his/her duties.
- In rescuing a person in immediate danger.

Further information relative to these indemnities may be obtained from the State Board of Control.

33010.29 Hardship Salary Advances

In accordance with provisions of the SAM 8595, a hardship salary advance may be issued to an employee before the employee's regular monthly, bimonthly, or intermittent payday. The hardship salary advance shall be based on the net amount of the employee's regular base salary and shall only be for serious, unforeseeable hardship.

It is the policy of the Department that all employees receive a paycheck each payday. For all permanent employees, except intermittent or hourly employees, this is the last working day of each pay period. For intermittent, hourly, or temporary employees, this is no later than the fifteenth calendar day of the month providing the attendance documents are received in the Personnel Office timely.

A request for hardship salary advance is not an automatic option nor is it intended to be a simple loan made available to the employee. The Department cannot legally loan employees money to cope with the economic difficulties or temporary inconveniences that occasionally fall upon every individual. A hardship salary advance cannot be a substitute for adequate personal financial management.

The circumstances during which a request for a hardship salary advance is made shall have the following characteristics:

- The situation or event was such that it caused an immediate emergency or economic hardship on the employee or those economically dependent upon the employee.
- The situation or event was such that the employee could not have reasonably planned or prepared for it in advance.
- The employee has exhausted all conventional means of obtaining necessary funds elsewhere (savings, credit union, bank, etc.). A hardship salary advance shall only be the last resort.
- A description of the situation or event that warranted the request for a hardship salary advance is clearly provided with adequate supporting documentation.
- The amount of the request is clearly documented and does not exceed the net salary earned to date by the employee. The amount allowable for a hardship salary advance shall be based on the employee's net regular base salary, excluding overtime, physical fitness, bilingual, recruitment, and retention pay, etc. The maximum amount available shall be the regular wages earned to date during the calendar month of request. (See Department Personnel/Payroll Services Guidelines for further details and for information regarding direct deposit.)
- A hardship salary advance has not been requested for the prior 12-month period. Hardship salary advances shall be limited to one for any 12-month period.

Acceptable Reasons

The following is a listing of some of the acceptable reasons for applying for a hardship salary advance:

- Acts of vandalism that have caused significant damage to vehicle or residence that require immediate repair.
- Emergency home repairs due to unforeseeable events such as fire, flooding, storm damage, theft, or vandalism.
- Emergency medical expenses due to serious injury or prolonged illness.
- Death in the immediate family.

Unacceptable Reasons

The following is a listing of examples of unacceptable reasons for hardship salary advances:

- Moving expenses.
- School expenses.
- Vacation expenses.
- Being away from the office on payday.
- Routine vehicle maintenance or vehicle repair as a result of normal usage.

- Automobile loan or lease payments.
- Monthly rent or mortgage payment.
- Other items that the employee should have planned and/or budgeted for since they are recurring, predictable expenses.

The above lists are not meant to be exhaustive, but rather examples. Good judgment shall be used in requesting and in approving hardship salary advances.

33010.29.1 Process

Wardens shall designate a staff member (minimum level is the Business Manager) to review all hardship salary advance requests for their respective facilities.

The Chief of the Office of Accounting Management shall be the reviewer for headquarters and for the P&CSD (headquarters and field offices).

The employee shall submit a written request to his or her supervisor for a specific amount with sufficient explanation of the circumstances to indicate that it is an unforeseeable emergency and some supporting documentation that all other means of obtaining the necessary funds have been exhausted. In addition, the employee shall sign a CDC Form 1161, Authorization for Repayment of Payroll Revolving Fund/Hardship Salary Advance. (See Department Personnel/Payroll Services Guidelines for additional information regarding direct deposit limits.)

33010.29.2 Responsibilities

Supervisor of Requestor

Prior to signing and forwarding the hardship salary advance request, the supervisor of the requestor shall:

- Review the request.
- Verify the unforeseeable emergency if appropriate.
- Verify that all other means of obtaining necessary funds have been exhausted.
- Verify that CDC Form 1161 was filled out and attached.
- Verify the actual emergency expense or the net salary earned to date, whichever is less.
- If approved, sign the request and forward it to the designated reviewer with all appropriate supporting documentation.
- If denied, return the request to the employee.

Designated Reviewer

Prior to signing and forwarding the hardship salary advance request, the designated reviewer shall:

- Review the request for appropriateness.
- Request further verification if necessary.
- If approved, sign the request and forward it to the personnel office (with all appropriate supporting documentation).
- If denied, return the request to the employee.
- Maintain a copy of each request (approved or denied).

Personnel Office

The personnel office shall:

- Determine the vacation leave, sick leave, dock, etc., that the employee has used in that particular month.
- Determine that the amount requested does not exceed the net salary earned to date. Determination may be based on payroll records of prior pay period or other appropriate method.
- Determine the employee's normal mandatory and voluntary payroll deductions. A participant of the Direct Deposit Program shall cancel their participation in the Direct Deposit Program prior to the hardship salary advance being issued.
- May reduce the request so that the amount does not exceed the salary earned and/or net pay of the prior pay period.
- Notify the accounting office in writing to issue a revolving fund check.
- Recover the amount of the hardship salary advance from the employee's next payroll warrant or, if necessary, from subsequent payroll warrants (i.e., overtime, physical fitness pay, uniform allowance, future pay warrants, etc.).

If necessary, Department Personnel/Payroll Services Guidelines shall be referenced for further clarifications on hardship salary advances.

Accounting Office

In addition to the normal revolving fund requirements, the Accounting Office shall:

- Issue the revolving fund check as approved by the Personnel Office.
- Notify the employee when the check can be picked up.
- Follow normal collection procedures to clear the salary advance in a timely manner.

33010.30 High Stress Assignments

High stress assignments are those in controlled housing units requiring direct and continuous contact with inmates confined therein because they present too great a management problem for housing in general population settings. Such housing unit assignments include, but are not limited to, the following:

- Security Housing Units.
- Administrative Segregation Units.
- Psychiatric Management Units.
- Protective Housing Units.

33010.30.1 Selection

Employees shall:

- Be carefully evaluated before such assignment.
- Have demonstrated a high degree of maturity, tolerance, and ability to cope with stressful situations.

33010.30.2 Duration

High stress assignments shall be limited to no longer than two years.

Exceptions may be made by the Warden when:

- The employee indicates a desire to remain.
- The employee's performance is completely satisfactory and does not reflect the effect of undue stress.

33010.30.3 Supervision

Supervisors shall:

- Evaluate the performance of employees on a continuous basis.
- Act promptly to remedy stress-related problems that appear to adversely affect the employee's physical and mental health and effectiveness.
- Take remedial action including placement in a less stressful assignment in or outside of the unit.

33010.31 Personnel Records

Only those personnel records which are necessary, relevant, timely, or required by law shall be collected and maintained.

Personnel records shall be maintained no longer than the period of time required by law or in accordance with the approved Department retention period established for the record.

33010.31.1 Definition

Any record maintained under an individual's name by their employing agency and containing records relating to the following:

- Personnel data, including marital status, family members, educational and employment history, or similar information.
- Medical history.
- Election of employee benefits.
- Employee advancement, appraisal, or discipline.
- Complaints or investigations of complaints pertaining to the manner in which the employee participated or was perceived to have participated.
- Summary criminal history information.
- Any other information, the disclosure of which would constitute an unwarranted invasion of personal privacy.

33010.31.2 Public Information

Pursuant to CC 1798 et seq., and the Information Practices Act, the following employee information is considered "public" and may be released upon request:

- Name.
- Employing agency and name of unit.
- Work location and office phone number.
- Civil service classification.
- Job description, duties, and responsibilities.
- Salary range and gross salary rate.
- Time base.
- Tenure.
- Date appointed and/or separated.
- Cost to the State for training, travel, and/or attendance at conferences.

33010.31.3 Adverse Comments

GC 3305 provides that no comment adverse to a public safety officer's interest shall be entered in any file used for personnel purposes without the employee's having first read, signed, and dated the document. The Director has extended the application to all Department employees. If the employee refuses to sign, the fact is noted on the document and it is then signed by a witness (usually the supervisor presenting the memorandum) prior to it being placed in the file.

The employee has 30 calendar days in which to file a response to any adverse comment. If a response is made, it shall be attached to the document that contains the adverse comment.

33010.31.4 Disclosure

PC 832.7, GC 6254, and CC 1798 protect the confidentiality of personnel records and strictly limit their disclosure. Information from employee personnel records (other than public information) shall be disclosed only as follows:

- To individuals whose official duties require they process or review such records including, but not limited to:
    - Personnel staff.
    - Hiring supervisors/managers including Wardens, Regional Parole Administrators, and Executive Staff or their designees.
    - Employee Relations Officers.

- Return-to-Work-Coordinators.
- Department investigators.
- Attorneys representing the Department.

- In accordance with PC 832.5, 832.7, and 832.8; EC 1043; and GC 6254, the employee shall be immediately informed of the service of a subpoena or court order requesting the release of personnel records. Advice of legal counsel will be sought where legality of disclosure is in question.
- With a release signed by the employee to whom the record pertains. The employee's signature shall be verified with that on file.

33010.31.4.1 Medical Records

Medical records are confidential and are maintained in such a manner so as to protect that confidentiality. These records are generally exempt from inspection other than by personnel staff.

33010.31.4.2 Internal Investigations

If a review of the personnel records is required during an internal investigation, the reviewer shall obtain authorization from the Director, or designee, before the review can be granted.

TYPE OF OFFICIAL INVESTIGATION	DESIGNEE
Third Level Complaints/ Grievances	Chief, Labor Relations Branch
Discrimination or Sexual Harassment complaint	Assistant Director, Equal Employment Opportunity Office
Background Investigations	Chief, Selections and Standards Branch
Criminal and/or Administrative Investigations	Assistant Director, Law Enforcement and Investigations Unit

Additionally, attorneys from the Legal Affairs Division are authorized to review personnel records.

33010.31.4.3 Supervisory Files

To maintain a system of comprehensive and effective record keeping, supervisors may keep an informal personnel file on their premises in addition to the Official Personnel File (OPF) maintained by the personnel unit. This informal file shall be subject to the same provisions as the OPF.

33010.31.4.4 Work Performance Inquiries

Supervisors may comment on the work performance of subordinates or former subordinates and respond to inquiries from third parties about a subordinate's or former subordinate's qualifications, as long as such comments are founded in documentation. A supervisor may indicate whether a subordinate or former subordinate would be considered for rehire. Personal or confidential information shall not be disclosed unless authorized by the individual to whom it pertains (CC 1798.50).

33010.31.4.5 Employee Access to Personnel Records

GC 18573 permits an employee to examine employment records relating to their State service. All of the material, except for the following, may be reviewed:

- Any medical information determined to be confidential under CC 1798.3 (c) (i.e., information containing custodian of the record reasonably determines that disclosure of the information would be medically or psychologically detrimental to the individual) or medical file material which is protected by the attorney/client privilege. An employee may authorize disclosure of medical information to their physician. In turn, the physician may disclose to the employee any information they deem appropriate.
- Any confidential information contained in an applicant's background investigation file.

33010.31.4.6 Employee Representative Access

Personnel records may be reviewed by an employee's representative with the written permission of the employee and proper identification of the representative. Any and all information available to the employee shall also be available to the representative.

33010.31.5 Review Process

An appointment should be made with the personnel office staff or other office holding the file.

The reviewer shall present identification to the personnel office staff prior to reviewing any personnel record.

Original OPF's shall not be removed from the personnel office area designated as the review area and may be reviewed only in the presence of an authorized personnel office employee.

Travel to the employee's personnel office and time required for travel and review of the employee's records shall be at the expense and on the time of the employee. An employee may request a copy of the record to which they have a right to access, be mailed to their office. The copy will be mailed in a sealed envelope marked "Personal and Confidential."

33010.31.6 Inspection Log

Each employee's OPF shall contain an inspection log. Any person reviewing the file shall sign and date the log, indicating the reason for review (in accordance with the law).

33010.32 Release of Regular Pay for Permanent Intermittent Employees

All positive pay employees shall receive their regular pay for the appropriate number of hours worked in the pay period (including paid leave and holiday pay) no later than the 15th day of the following month. If the 15th day falls on a Saturday, the release date will be adjusted to the preceding workday. If the 15th day falls on a Sunday or holiday, the release date shall be adjusted to the following workday.

If an SCO warrant is not issued by the deadline, a request to issue a revolving fund check (salary advance) will be sent by the personnel office to the respective accounting office on that date.

33010.32.1 Exceptions

Release of checks for positive attendance regular pay may be delayed beyond the 15th day of the month for the following reasons:

- Late receipt of CDC Form 998-A, Employee's Attendance - Record and PALS Worksheet.
- Late receipt of proper appointment documentation.
- Delay in mail delivery (outside the control of the Department).

Note: Employees separating from State service shall receive their final compensation only after all required documents (including CDC Form 648/648-A, Report of Separation) have been received by the personnel office. All outstanding salary advances, travel advances, and accounts receivable have been recovered and all Department equipment has been turned in.

33010.33 Revisions

The Deputy Director, Administrative Services Division, or designee shall be responsible for ensuring that the contents of this section are kept current and accurate.

33010.34 References

GC §§ 3305, 6254, 13959 through 13969.1, 13970 through 13974, 18573, 19853, and 19991.4.

Governor's Executive Order R29–71.

SAM §§ 0721 through 0774, 3800 through 3885, 8572.1 and 8595.

Personnel Transaction Manual § 656.

CCR (15) (3) §§ 3289 and 3413.

Secretarial Handbook 2–7000.

DPA Rules 599.737, 599.738, 599.742, 599.742.1, and 599.752.

CC §§ 1798 - 1798.50, 1798.3 (c).

Information Practices Act of 1977.

PC §§ 832.5, 832.7, and 832.8.

EC §§ 1043.

GC §§ 3305, 6254, 13959 - 13969.1, 13970 - 13974, 19849.9, and 19853.

ARTICLE 21 — UNIFORMS

Effective February 20, 1990

33020.1 Policy

All designated personnel shall wear regulation uniforms or work clothing and insignia as prescribed by The Director, unless specifically excepted by the Warden or RPA. While on duty, employees shall dress in neat and conservative attire appropriate to their assignments. Employees shall not wear Department uniforms in any tavern, gambling hall or night club, except if necessary in the performance of assigned duties.

33020.2 Purpose

This section establishes uniform and/or dress requirements and specifications and the official insignia for the following classifications:

- All custodial personnel below the rank of captain.
- Fire department personnel.
- Medical personnel.
- Food services personnel.
- Craft and maintenance personnel.

33020.3 Disclaimer

If any provision in this section is in conflict with a Memorandum of Understanding (MOU), the MOU shall prevail as it relates to the specific represented group.

33020.4 Responsibility

Wardens/RPAs

Each hiring authority shall designate specific assignments where custodial personnel have been excepted from wearing a uniform, are not required to wear a uniform full-time or who may wear the optional or special uniform in lieu of a regulation uniform.

Due to the extreme differences in the weather and/or terrain conditions at institutions/facilities throughout the State, individual hiring authority may prescribe other optional uniforms based on those conditions (e.g., heavy coats in extreme cold or snow conditions or heavy boots in rough terrain areas). Such optional uniforms shall be authorized in writing with a copy of the authorization submitted to the appropriate Deputy Director prior to such authorization being placed into effect.

Inspections

Each hiring authority shall:

- Establish an annual "Class A" uniform inspection which will be conducted on three consecutive working days. This shall not prohibit the Warden/RPA from designating additional formal inspections.
- Establish and enforce local dress codes and personal grooming standards for all employees not required to wear a uniform.

Supervisors

Supervisors shall:

- Conduct daily uniform and grooming inspections of all immediate subordinate staff.
- Instruct employees to correct violations of uniform and grooming standards.
- Report, in writing, to their immediate supervisor, any violation an employee fails to correct in a reasonable amount of time.

Employees

All uniform personnel shall:

- Purchase and maintain all required uniforms, accessories, and equipment except items specifically exempted by this section, the appropriate MOU, or the hiring authority.
- Furnish their own collar insignia, shoulder insignia, sleeve chevrons, shoulder patches, hat shield and other required uniform equipment.
- Maintain their uniform and approved equipment in clean, neat and serviceable condition.
- Wear the uniform in a manner that displays a professional approach to their assignment and is representative of the prestige of the Department.
- Keep in mind that individual actions reflect on the entire Department as they represent the Department in the public view.

Shall Not

- Uniformed employees, when dressed in uniform, whether on duty or off duty, are subject to public scrutiny and shall not:
    - Purchase or drink alcoholic beverages in public.
    - Participate in political activities.
    - Engage in selling or soliciting activities.
    - Engage in any other action or behavior which reasonable persons would deem inappropriate for a uniformed peace officer.

Nonuniform Employees

Employees not required to wear a uniform shall wear neat and conservative clothing in keeping with the requirements of their assignments. Blue denim clothing or clothing similar to that worn by inmates shall not be worn. Wardens shall establish and enforce local dress codes and personal grooming standards.

33020.5 Uniform Allowance

The regulations of the BOC and current labor management agreements (MOUs) provide for uniform replacement allowances for various classes. The allowance amounts and other regulations vary depending on whether the uniform is worn on a full-time or less-than-full-time basis. In order to qualify for uniform replacement allowances, employees shall:

- Be employed in one of the following classes:
  - Officer.
  - Sergeant.
  - Lieutenant.
  - Captain.
  - Firefighter.
  - Institution Fire Chief.
  - Baker I, Correctional Facility.
  - Baker II, Correctional Facility.
  - Butcher/Meatcutter II, Correctional Facility.
  - Cooks - Correctional Facility.
  - Supervising Cook I, Correctional Facility.
  - Supervising Cook II, Correctional Facility.
  - Vocational Instructors (I and baking).
- Be enrolled in a formalized training and development assignment at an institution performing the duties of one of the above-named classes and requiring a uniform be maintained.
- Complete one calendar year of service in a class and assignment as described above. Qualifying periods before and after nonqualifying periods shall be added together to compute a calendar year of service and to establish a new qualifying anniversary date. Nonqualifying periods include long-term temporary absences (one or more full pay periods), such as leave of absences, temporary disability, or nonindustrial disability leave.
- Rank and file uniformed probationary custodial employees shall receive a uniform allowance in accordance with the provisions contained in the collective bargaining agreement.

33020.6 Personal Grooming Standards

All employees, regardless of their assignment, shall be clean and well groomed. The following minimum guidelines are adopted for all peace officers:

- Hair shall not be styled or combed forward any lower on the forehead than the eyebrow, measured from the high point of the eyebrow, and shall not be visible on the forehead when the uniform hat is worn.
- Hair style and length shall not impede, restrict, or detract from the proper wearing of the uniform hat.
- Hair style and color shall not distract from the uniform.
- Male employee's hair shall not extend below the top of the shirt collar while sitting or standing in an erect position and shall not cover any part of the outside portion of the ear.
- Female employee's hair shall not extend below the bottom of the collar. If the hair is long, it shall be worn up in a neat, nonflamboyant style. No decorations in the hair are permitted and hair clips and/or pins shall match the color of the hair.

Facial Hair

Neatly trimmed sideburns and/or moustaches are permitted as follows:

- Sideburns shall not extend below the bottom of the ear and shall end with a clean-shaven horizontal line. The maximum width at the bottom of the sideburns shall not exceed 1-1/2 inches.
- Moustaches shall not extend more than 1/2-inch below the corners of the mouth nor below the vermilion border of the upper lip, or extend more than 3/4-inch above the corner of the mouth. Waxed ends or points shall not be allowed.
- Upon the CMO's verification of a skin irritation or disorder, a beard not to exceed one inch in length may be permitted.

Fingernails

Fingernails shall not extend more than 1/4-inch beyond the tips of the fingers. Nails shall be neat and clean. fingernail polish, if worn, shall be clear. Colored fingernail polish is not permitted.

Cosmetics

Female employees may wear cosmetics which blend with or match the natural nonruddy skin tone of the employee. False eyelashes are not permitted.

Upon medical verification by the CMO, any employee may wear cosmetics to conceal facial disfigurement. The cosmetics shall blend or match their natural skin tone.

Jewelry

A total of two non-flamboyant rings may be worn on the fingers. a set of wedding and engagement rings shall be considered on ring. Reimbursement value to be per DPA rules, but shall not exceed $100.

Medical alert bracelets only may be worn.

Neck chains/necklaces shall not be permitted while on duty except religious medals may be worn if covered by the uniform shirt. Medical alert medals may also be worn on a chain. However, no more than one chain shall be worn.

Employees shall not wear stud earrings or other jewelry decoration on the nose while in uniform.

Female employees may wear simple stud-type earrings only. Only one matching earring shall be worn in each ear.

Male employees shall not wear earrings while in uniform.

Wristwatches may be worn. Watches worn on chains or pinned to the uniform are not permitted. Pocket watches are allowed without a chain or lanyard. Reimbursement value to be per DPA rules, but shall not exceed $100.

33020.7 Regulation Uniform - Peace officer

Regulation peace officer uniforms shall be as specified in this section.

33020.7.1 Official Class "A" Uniform - Male

The below specified uniform shall be worn by male captains, lieutenants, sergeants and officers:

- Regulation battle jacket with insignia (dress jacket).
- Regulation trousers - Forest green with 1/2-inch black and gold piping.
- Black leather belt 1-1/2-inch or 1-3/4-inch width with single gold metal prong tongue buckle, buckle shall be no wider than 2 x 2 inches (no decorations except official Department belt buckle or Warden approved institutional belt buckle).
- Black clip-on tie.
- Black socks (solid color).
- Regulation uniform hat with gold insignia and gold chin strap.
- Regulation long sleeve shirt; dry clean only.
- Black plain-toe shoes or boots conservatively designed without buckle.
- Regulation departmental badge.
- Departmental shoulder patch attached to the sleeves of regulation shirt and regulation dress jacket.
- Departmental nameplate (white letters on black plate).
- Tie bar or tie tack (gold in color).
- Whistle (gold in color).
- Identification card.
- Raincoat (when applicable).

Battle Jacket

The battle jacket specifications shall be as follows [regulation battle jacket with insignia, (dress jacket) optional]:

- The jacket shall have a care label permanently affixed and shall have a size label showing fiber content and WPL number.
- Fabric: Milliken Mills #4936-3064; Color: Forest green; Content: 100% polyester: Weight: 13-1/3 ounces; Weave: elastique or equivalent.
- Waist length jacket with a zipper to the bottom of the lapel. Shall have peak lapels and a bi-swing back. A cloth belt shall be stitched down in the back. Side adjustment straps, shoulder straps, two breast patch pockets with flaps, side body, one inside pocket, nylon lined body and sleeve, and inner vitals including shoulder pads. One badge tab and no waistband.
- Two box pleated breast pockets with flaps with Velcro at the edges of the flaps. Flaps shall button with gilt Eureka buttons. Shoulder straps and side straps shall have gilt Eureka buttons. One inside pocket on the right side. Bi-swing two-piece back (bi-swing connected to Lastex). Sweat shields of the same material as jacket. Turn-up at bottom approximately 2-1/4 inches.
- After jacket has been completely sewn and ready for pressing, it shall be pressed on both utility presses and shaping presses. All loose threads shall be removed. All proper size tags, content labels and care instructions shall be properly affixed to the garment.
- Rices #2914 sleeve piping, or equivalent, placed on each sleeve from seam to seam 3 inches above cuff.
- References: Fechheimer Bros. #32165 Correctional Dress Jacket, Horace Small #3323, or equivalent.

Regulation Trousers

Regulation trousers specifications shall be as follows:

- Trousers shall bear the following label guaranteeing genuineness of the material used: "We guarantee this cloth to be genuine 100% Texturized Polyester/Dacron."
- Material: Color forest green, 100% Texturized Polyester/Dacron blend.
- The trousers shall be made using a modified uniform pattern, having a plain front with straight side pockets and two back pockets. The front pockets shall have a minimum opening of 6 inches and shall be 5-1/2 inches by 6 inches deep from the bottom of the opening. They shall be stitched, turned, and restitched. The back pockets shall have a minimum of 5-1/2 inches and shall be 6 inches deep. They shall be made with a Reese PW automatic machine and shall be finished on the outside with an exposed top and bottom cord. The left hip pocket shall be button-thru. The front pockets shall have straight bartacks, and each back pocket shall be bartacked with a triangular bartacking machine.
- The waistband shall be a minimum of 2 inches wide and shall be closed with a crush-proof hook and eye (the eye being bartacked for stability). The waistband curtain shall have snugtex and be 65% Polyester/35% cotton with durable press finish and shall match the color of the pocketing. The waistband curtain twill shall have a minimum thread count of 66 x 56, and there shall be 2.90 yards per pound. It shall be attached with a rocap machine. Waistband stiffener 3/4-inch in width shall be sewn into the waistband on the front of the trouser from side seam to side seam to prevent waistband rollover. The trousers are to have a continuous closed waistband.

- All pocketing shall be 65% Polyester/35% Cotton with PRES-TU-LAST finish. The front pockets should be constructed from one piece of material with a woven reinforced area starting at the bottom and extending up approximately 3-1/2 inches. From the bottom up, it shall be woven 72 x 60. Since this reinforced area assures double wear, no other type pocketing shall be acceptable. All pocketing shall be black in color.
- The right fly lining and crotch lining shall be of the same fabric and color as the waistband curtain. The right fly lining shall be sewn to the left fly below the zipper. The inside left and right flies shall be fused with an interlining for stability. A separate French fly made of the outer fabric shall be sewn to the inside right fly. The crotch lining shall be serged to each front.
- There shall be five belt loops on waist sizes 28, 29, and 30 and a minimum of seven on all sizes over 30. The loops shall be 2-1/2 inches wide at the top and tapering to 1-1/2 inches at the bottom. Except for the back loop, which shall be tacked on, all loops shall be sewn into the bottom of the waistband and into the rocap.
- The trousers shall be closed with a Talon 42 Nylon zipper with a memory lock slider. The zipper tape shall have been treated for Durable Press finishing. There shall be a brass bottom stop at the base of the zipper chain. A straight bartack shall be sewn through from the outside of the garment to the inside at the bottom of the fly. It shall be sewn through the zipper tape, the right and left fly, and the right fly lining. The right and left fly shall be joined by an additional bartack located below the bottom zipper stop on the inside of the trouser. This bartack will reduce stress on the left fly and zipper.
- The entire trouser is to be seamed with Polyester core thread and the seat seam shall be stitched with a tandem needle seat seaming machine.
- The trousers shall be made in a first-class workmanship manner with all loose threads removed. They shall be pressed completely and properly. Side seams, inseam, and seat seam shall be pressed open. There shall be a Texpak clip attached.
- The trousers shall have a sewn-in label giving care instructions and shall be marked with a lot number, fiber content, size, and WPL number.
- One-half inch gold on black background pant side piping. Stripe shall extend from the bottom of waistband the length of the pant leg.

Long/Short Sleeve Shirt

The long sleeve shirts specifications shall be as follows:

- Material: Silver tan tropical, 55% Dacron/45% Rayon, two-ply x two-ply.
- Extra form-fit body; attached cross-stitched shoulder straps with matching button and buttonhole; placket front; five permanent military creases (stitched creases are prohibited); and normal shirt tail for inside wear only. Badge tab to be of matching material with metal eyelets and centered 1 inch above left pocket.
- Long-sleeve with one button on sleeve facing and two-button cuff.
- Plain pockets with scalloped flaps; pencil slot in left pocket; and matching button and buttonholes on pockets.
- Medium spread collar with satin yoke and band lining and permanent collar stays attached to collar.

The short sleeve shirt shall be the same as the long-sleeve shirt except short sleeves with stitched false cuff.

33020.7.2 Official Class "A" Uniform - Female

The below-specified uniform shall be worn by female captains, lieutenants, sergeants and officers:

- Regulation dress female jacket, blazer style with insignia or the regulation dress battle jacket with insignia.
- Regulation skirt or pants - Forest green with 1/2-inch black and gold piping. (Pants only shall have the piping).
- Black leather belt 1-1/2 inch or 1-3/4 inch width with single gold prong tongue buckle, buckle shall be no wider than 2 x 2 inches (no decorations except official Department belt buckle or Warden approved institutional belt buckle).
- Black clip-on tie or criss cross tie.
- Seamless hose (flesh color) with skirt only; black socks (solid in color) with slacks.
- Regulation uniform hat with gold insignia and gold chin strap.
- Regulation long sleeve shirt; dry clean only.
- Black plain-toe shoes or boots conservatively designed without buckles.
- Regulation departmental badge.
- Departmental shoulder patch attached to the sleeves of regulation shirt and regulation dress jacket.
- Departmental nameplate (white letters on black plate).
- Tie bar or tie tack (gold in color).
- Whistle (gold in color).
- Identification card.
- Raincoat (when applicable).

Blazer Style Dress Jacket

The blazer-style dress jacket specifications shall be as follows:

- Material: Forest green, 100% Dacron/Polyester.
- Form fitting classic-style jacket, long sleeve. Four button front with 1-inch welt pockets just below waistline. Notched collar and lapels. Self-fabric facings, full length of the front.
- Jacket shall be furnished with pointed shoulder straps 2 inches wide at the sleeve head, 1-1/2 inches wide at the collar, and long enough to extend to be tacked down under the collar. Shall have buttonhole, running perpendicular to the collar, centered in the open end of the flap and a gilt Eureka 24-ligne button correspondingly placed so that it is flush with the edge of the collar.
- All sewing shall be done with Polyester core thread.

- Arm shields shall be piped and made of same material as the jacket.
- Jacket shall be tailored with good quality, matching lining with coat fronts, employing standard practices used in coat construction.
- Department service stripes, gold on a black background shall be placed on left sleeve 1/2-inch from arm braid piping.
- Badge tabs shall be of same material with eyelets and centered 1-inch above left pocket.
- For shape retention, the collar and front facing shall be interlined with heavy "armo," "hypo" or pellon-type fabric. The back to be four pieces with a center back vent opening. The front to be four pieces to assure proper bust fit. The bottom of jacket shall be finished with a 3-inch turn-under sewn to the lining so that no outside stitches will show. Turn-under shall be reinforced with adhesive-type pellon. Jacket shall be fully lined with matching color 70/70 Denier Nylon Taffeta,. 104 x 68 thread count.
- Regular coat style sleeves set in with single needle having a minimum 2-inch hem for alteration. The bottom of the sleeve shall be lined with wigan.
- Pockets shall have two, 1-inch welts with flap and gilt Eureka button approximately 4-1/2 inches in length, matching inside fabric and lining. Placed on bottom of fronts just below waistline. Two inside pockets at chest level.
- The collar shall be lined; top and bottom collar to be self fabric.
- Four, 24-ligne standard gilt Eureka shank buttons.

Long/Short Sleeve Shirt

The long sleeve shirt specifications shall be as follows:

- Material: Silver tan tropical, shade #193 or equivalent, 55% Dacron Polyester and 45% Rayon, 2 x 2 ply.
- Extra form-fit style; attached cross-stitched shoulder epaulets with matching buttonhole and button (20-ligne); placket front or regular opening, buttoning from right to left; five permanent military creases (stitched creases are prohibited); and normal hemmed shirt tails for inside wear only. Badge tabs must be of matching material with eyelets and centered 1 inch above left pocket.
- Long sleeves with 3-inch placket opening (self fabric bound) and button cuff, square (right angle) corners.
- Two flat 4 x 6-inch patch pockets with rounded corners on bottom. The top to be turned back double to provide a double thickness for the flap button. Two pocket flaps (scalloped); pencil slot on left pocket; and matching button on top center of pocket patch, matching buttonhole on center of scalloped flap.
- Two-piece collar, medium spread, interlined, single-row stitching (1/4-inch from edge).

The short sleeve shirt shall be the same as the long sleeved shirt except short sleeves with stitched false cuff.

Regulation "A" Line Skirt

The "A" Line Skirt specifications shall be as follows:

- Material: Forest green, 100% Polyester/Dacron blend.
- Modified "A" line, 2-gore front, 2-gore back--2/3 lined; smooth waist-to-hip fit (no darts); left side seam zipper opening; five, 3/4-inch self material belt loops; 1-5/8 inch finished width self fabric waistband; hook and eye or button and buttonhole belt band closure (optional); and inside tape hanger loops.
- Vertical openings on pockets at left and right seam; one watch pocket on right side waistline; and matching lining (The employee may decide to omit the pockets if she wishes).
- Two-inch hem turn-under; edge pinked or taped (optional).
- Eight-inch metal side zipper with automatic lock.
- Shall be worn no higher than the top of the kneecap.

Regulation Slacks

The regulation slacks specifications shall be as follows:

- Material: Forest green, 100% Polyester/Dacron blend. Pants shall have a 1/2-inch gold on black background piping on the outside of pant legs. It will extend from the bottom of waistband to the hem of leg.
- Modified flare legs; darted smooth waist to hip fit; front zipper opening; and lining reinforced crotch.
- Vertical openings on pockets at left and right side seam; one watch pocket on right side waistline; and matching lining (The employee may decide to omit the pockets if she wishes).
- Self fabric, 1-5/8-inch finished width waistband with hook and eye or button and buttonhole closure.
- Eight-inch metal front zipper with automatic lock.
- Five, 3/4-inch wide self fabric belt loops.

33020.7.3 Uniform Hat Class "A"

The Class “A” uniform hat shall be worn with the class A uniform. When outside an enclosed building, all on-duty uniformed peace officer personnel entering the security area will be required to wear a hat with the class A uniform. This is to include entering and/or leaving the worksite, yard or other outdoor area.

The Class “A” uniform hat specifications shall be as follows:

- In band to be 2-inch, 2-ply herringbone composition frame covered with lining.
- Sweat band shall be all leather 1-7/8 inches felled with six stitches to an inch.
- Chin strap material shall be gilt metal. Style to be 1/2-inch wide and 11 inches long, overall. To be expansion snake-type style. Eyelets to be placed at each end to accept a 22-1/2-ligne Eureka button.
- Stay shall be 2-ply genuine hair cloth reinforced with 1 inch wide steel wire covered with gold satin lining sewn on frame, measuring 3 inches in width at the top tapering down to 2-1/2 inches at the bottom, mounted with top 2 inches above frame.

- Grommet shall be foam rubber (U.S. Patent No. 2536135) or other material equal in ability to maintain the shape of the cap.
- Visor shall be 45-degree angle with black patent leather top and green suede, or dark green, or black hard leather bottom finish to be sewn onto frame. Length of visor to be 2 inches.
- Shall have one, 22-1/2-ligne, gilt Eureka button, screw-post type placed on each side to accept chin strap.
- Lining shall be gold Rayon satin completely covered with plastic sweat protector.
- Crown cover, removable type, to measure 10-3/4 inches in diameter with front measuring 4 inches to the piping, sides to be 2-1/4 inches with back measuring 2 inches. These dimensions are for a size 7-1/8-inch cap. Circumference may vary 1/4-inch in proportion to head size.
- Piping cloth shall be same material as cover, sewn in between crown and quarters.
- Braid material shall be black, 1-1/2 inches Mohair cap braid. Style shall be one-piece of such size as to fit around outside of finished frame and to be removable.

33020.7.4 Undergarments

The undergarment specifications shall be as follows:

- Undershirts may be worn by both men and women in uniform. If worn, the shirt must be T-shirt style, solid white in color, and of a smooth finish. No designs or other colors are permitted. No fish net or other ventilated styles are permitted.
- Socks, for both men and women, shall be solid black in color. No designs are permitted.

33020.7.5 Cadet Uniform

The below-specified cadet uniform shall be worn during the hours of 0700 to 2130, unless otherwise directed or when specific exceptions are authorized by members of the academy staff when classes are scheduled. The cadet uniform consists of:

- Dark brown trousers.
- Tan, short sleeve shirt with academy patch.
- Dark brown jacket, to be worn for dress inspections and when weather dictates use.
- Black, plain toe shoes or boots, polished to a high gloss daily (Patent leather shall not be allowed).
- Black clip-on tie with plain gold colored tie bar.
- Brown academy cap.
- Black basket weave belt, 1-3/4 inches wide, with gold colored buckle.
- Solid black socks (Female cadets may wear optional flesh colored seamless hose).
- A key holder with gold colored key clip.
- A gold colored whistle (without chain) shall be worn on the key holder.
- The cadet name tag shall be worn centered and directly above the left shirt pocket.
- The cadet identification card shall be carried by the cadet at all times.

Each cadet shall be prepared to stand uniform inspection at 0745 hours of every classroom day. This inspection shall be conducted by the company commander.

33020.7.6 Temporary Employee Uniforms

Permanent intermittent employees (PIE) and probationary officers shall be required to purchase one Class "B" shirt and pants for graduation from the Basic Officers Academy.

33020.8 Optional Uniforms Peace Officer

Optional peace officer uniforms shall be as specified in this section.

33020.8.1 Class "B" Uniform

The optional Class "B" uniform may be worn by custodial personnel when a Class "A" uniform is not required and it may be worn year-round when designated by the hiring authority.

The Class "A" jacket may be replaced with the foul weather jacket or the lightweight jacket.

Class "B" regulation trousers shall be the same specification as the Class "A" regulation trousers but without the piping.

Foul Weather Jacket

The foul weather jacket specifications shall be as follows:

- 100% Nylon super twill fabric.
- Forest green color.
- Body and sleeve lined with 1/4-inch Polyfoam quilted to 70 Denier Nylon taffeta face with nonwoven back, or to 88-count Nylon Tricot.
- Borg 1/2-inch Orlon Pile for the top collar. The under-collar shall be of the same fabric as the outer shell and the collar shall be interlined. Collar shall be attached so there is a clean edge, and there shall be a storm flap made of the outer fabric.
- Concealed zipper front, waist length, with separate waistband, five-button front and shoulder straps. Buttons shall be removable.
- Coat style sleeves. The bottom of sleeves shall be interlined with nonwoven fabric. There shall be concealed wristlets at the bottom of the sleeves. The bottom of the sleeve shall be vinyl bound 1/4-inch to shell.
- There shall be two box pleated patch pockets finished approximately 6-1/2 x 7 inches, with three pointed scalloped flaps and snap fasteners at each corner. The flaps shall have a firm interlining. Pockets shall have a firm interlining covered with polycotton so as to create a hand warmer pocket with an opening of approximately 5-3/4 inches on each side. The patch pockets shall be double stitched to the garment, and the left breast pocket shall have a

pencil compartment with an opening through the top of the flap. There shall be two pockets, one on the left side and one on the right side. All pocket flaps shall be interlined and flaps shall be bartacked at both ends.

- There shall be a badge tab of the outer fabric approximately 3/4-inch wide with two metal eyelets spaced vertically 1-inch apart and centered 2-1/2 inches above the left pocket flap.
- The front shall have five, 36-ligne metal buttons attached. The pocket buttons shall be 24-ligne. All buttons shall be the gilt Eureka metal buttons.
- There shall be a heavy duty storm zipper with automatic lock, size #9.
- Garment shall be constructed in a first-class workman-like manner, using high quality trimmings, and fast dye threads throughout.
- There shall be permanently affixed size labels and care instruction labels.
- References: Fechheimer Bros. #32145, Horace Small #3603, or equivalent.

Lightweight Jacket

The lightweight jacket specifications shall be as follows:

- 100% Nylon Oxford Weave, water repellent fabric.
- Forest green color.
- Jacket shall be a windbreaker style with a zipper front closure to the neck and plain back with shoulder straps.
- The front shall be constructed of two pieces on each side reaching from the bottom of the jacket to the shoulder seam. These two pieces shall be joined with welt stitched seams. Shirred elastic each side at waist for neat fit. The inside facing of the jacket shall extend from each bottom of jacket around neck where a zip-in liner can be attached. The jacket may open at the bottom on the side seams for handgun usage, closeable with Velcro.
- There shall be vertical front panels that form utility side pockets. The openings shall be bartacked at top and bottom for extra strength. Two breast pleated patch pockets with flaps to button. The cuffs shall be pointed with two buttons for cuff adjustment.
- The jacket shall be closed with a #5 metal style zipper with automatic lock and pre-shrunk tape. The zipper tape shall be compatible with outer fabric color.
- The collar shall be top stitched with collar points long enough for a neat appearance.
- Entire jacket shall be made in a first-class manner. Work clothing-type jacket shall not be acceptable. All loose threads shall be removed. Jacket shall be pressed with proper pressing equipment and shall be properly shaped.
- There shall be permanently affixed size labels and care instruction labels.
- References: Fechheimer Bros. #42155, 42156, and 42166, Horace Small #2503, or equivalent.

Lining (Optional)

A lining is optional. If a lining is chosen, specifications shall be as follows:

- Entire liner shall have an outer shell of 70 Denier Taffeta faced and 50 Denier Nylon Taffeta backed fabric. Shell may be of 88-count Tricot alternate.
- The liner shall be full cut, long enough to properly fit jacket and should have shirt style sleeves, properly bound and safety stitched. There shall be knit wristlets at the end of each sleeve.
- There shall be one right inside patch pocket. The pocket shall be bound with a proper width bias binding.
- There shall be a zipper all around the outside of the liner so that the liner may be properly zipped into the jacket.
- The entire liner shall be sewn with Polyester thread and shall have permanent size tag and care instruction label.
- References: Fechheimer Bros. #32704, Horace Small #C, or equivalent.

Class "B" Cap

The below specified cap may be worn with the Class "B" uniform or the optional special purpose uniform as approved by the hiring authority:

- 100% Polyester material. Seamless front baseball cap style with mesh back or cloth back. Round top with adjustable head size. Solid black in color.
- Shall favorably compare with the Hanes cap.
- The facsimile departmental seven-point star cloth patch shall be sewn on the center front of the cap.

The cap shall:

- Be worn in a bill-forward position.
- Not be worn with the Class "A" uniform jacket.
- Be worn only where nonpublic contact work assignments are made unless approved by the Warden.
- Be worn in a manner so as to not bring discredit to the uniform or the Department.

Trooper Cap

The trooper cap shall only be worn with approval of the Warden in areas of extreme weather. The specifications shall be as follows:

- Dark green in color, waterproof Antrol Nylon with Dynel fur trim.
- Adjustable top strap with four snaps.
- Quilted, black lining.
- Brim shall snap to up position with eyelet in center for hat shield.
- References: Alboum Hat Company Fur Trooper Antrol Nylon cap.

Rain Gear

Rain gear for outside use shall be a one or two piece raincoat or rainsuit, California green in color, or equivalent as follows:

- The one-piece raincoat is most applicable for uniform staff not assigned to long periods out-of-doors.
- The two-piece rainsuit is most applicable for uniform staff assigned to work assignments mainly out-of-doors.

Specifications

The rain gear specifications shall be as follows:

Material:

- 200 Denier Nylon Oxford with 1.25-ounce Polyurethane coating on inside with a total weight of 4.5 ounces per yard; not affected by extreme temperatures, will not stiffen, crack or peel; resistant to saltwater, steam, static; treated for flame retardancy; and machine washable in cool water.
- Seams shall be felled and sealed with Polyurethane to prevent leaking; all stress points must be double stitched; thread is Dacron wrapped cotton size 20; non-conductive nylon snaps; and seams and material will withstand a minimum hydrostatic pressure mullen method test of 40 psi.
- Rain coat, three-fourths length, 42 inches long; caped back for breathability; snap shut front with storm flap for extra protection; reinforced, double stitched at stress points to prevent tearing; Velcro side opening for weapon accessibility; and underarm vents.
- Rain jacket, length, 32 inches; seamless shoulders for freedom of movement; caped back for breathability; snap shut front with storm flap for extra protection; Velcro side opening for weapon accessibility; and underarm vents.
- Rain pants, waist high, with drawstring and snap on fly; reinforced, double stitched at stress points to prevent tearing; patch pocket on back; pass-through pocket on front.
- To eliminate any water penetration incurred by stitching on, of cloth nameplates and badges, a sealing compound will be applied by the vendor.
- References: Pack Trail Model #P-385 (pant), P-485 (jacket), P-585 (coat); California green in color, or equivalent.

Coverall (Optional)

The optional coverall specifications shall be as follows:

- Medium green color.
- Polyester, 35% cotton twill fabric.
- Basic design shall be with zipper breast pockets and pencil pocket on sleeve, unlined; bi-swing back; elastic at waist.
- Long or short sleeves.
  - Long sleeves shall have single snap at cuff.
  - Short sleeves shall be hemmed at approximately 10 inches in length.
- Normal utility pockets.
- There shall be a heavy duty zipper, full front, with automatic lock.
- The badge and name tag shall be constructed from cloth.
- References: Oshkosh Model #511-1032; Color: Olive; Transcon #UP501 (Green, Poplin only), or equivalent.

Sweater (Optional)

The optional sweater shall be a wooly pully sweater, 100% wool; V-neck; color: USMC olive with epaulets.

33020.8.2 Maternity Uniforms

Uniformed female personnel may wear the special maternity uniform after the employee receives her physician's written confirmation of pregnancy and subsequent acknowledgement of the CMO. The peace officer may continue to wear this special uniform for 90 days following childbirth.

Pregnant uniformed personnel are authorized to wear a pullover maternity jumper and to alter the waist of their uniform slacks for maternity purposes. Each employee shall bear the expense of clothing construction and alteration.

The uniform blouse or shirt and slacks shall be worn under the maternity jumper. The regulation tie shall be worn in accordance with institution policy.

A regulation dome badge shall be worn on the maternity jumper above the left breast.

Specification

The following design specifications shall be adhered to in the construction of the approved maternity uniform:

- Pull-over top and pull-on maternity pants shall be made utilizing McCall's Pattern, Number 7838, or equivalent.
- The pullover maternity top shall be fitted to individual comfort and shall be long enough to cover buttocks, but not exceed the fingertips in length. Flared pullover top, sleeveless, with or without pockets. If pockets are used, they shall be the hidden type in the side seams. Neckline shall be scoop.
- Pull-on maternity pants shall have maternity panel as shown in referenced McCall's pattern.
- Same fabric as used in constructing the regulation slacks.
- All sewing shall be done with 4-ply Polyester thread, forest green in color.

33020.9 Special Uniforms

Special uniforms for the peace officer series shall be as specified in this section.

33020.9.1 Security Squad and Escape Detail Uniforms

Institutions having special security squads and/or escape pursuit teams whose duties take them into various crawl spaces, tunnels, attics, etc., shall purchase and maintain the following equipment for such assigned personnel.

Maximum of three coveralls per employee assigned to this function.

When full hard hat protection is required, round green fiberglass or plastic hats with small visor in front may be used. Aluminum hats are not authorized. One plastic hat per employee assigned to the security squad shall be purchased and provided by the hiring facility.

33020.9.2 Safety Helmets

Helmets shall be purchased as armory equipment for use by personnel in emergency situations such as physical contact with incorrigible inmates.

- "DR-1, Defensor Helmet", and "TX-100 Toptex Motorcycle Helmet", or equivalent, are approved for departmental use.

33020.9.3 Culinary, Outside and Close Unit Assignments

Wardens may authorize the purchase of coveralls, as described in the DOM 33020.8.1, for issue to peace officer staff assigned to specified positions such as culinary, outside crews, or close custody units, if funds are available in the institution custody allotment.

As coveralls shall normally be issued as the need arises, an average selection of sizes should be maintained. Institutions shall affix a departmental shoulder patch and chevrons, as needed, to each of the coveralls procured.

33020.9.4 Departmental Transportation Unit Uniforms

The approved departmental transportation unit uniforms specifications shall be as follows:

- UP501 utility police style.
- Summer: Poplin.
- Winter: Gabardine twill.
- Black in color.
- Long or short sleeves.
- With the exception of the standard pockets that come with the uniform, the following additional pockets shall be standard. All pockets shall be zippered.
    - One thigh pocket; left leg only.
    - Hip or back pockets; one left, one right.
- Cloth identification label with the word "Transportation" to be secured above the right breast pocket. Specification:
    - Yellow lettering.
    - Black background.
    - One-inch tape, 1/2-inch letters.

Name Label

- Cloth name label with first initial and last name to be secured above the right breast pocket above the "Transportation" label. Same specifications as above.
- Belt loops shall be required on the uniform.
- State-issued, metal badge shall be the only authorized badge on the uniform.
- Boots (mandatory) as listed in DOM 33020.13.10.
- Cap as listed in DOM 33020.8.1.
- Bloused type coveralls.
- All leather accessories shall be black; all metal accessories shall be gold in color.

33020.9.5 Funeral Uniform

The official departmental uniform authorized for wearing at the funeral of another peace officer, or any other law enforcement official, when attending in an official capacity, shall be the full Class "A" uniform. This shall, in all cases, include the draped departmental regulation dome badge.

33020.9.6 Draped Badges Funeral/Mourning Period

The departmental regulation dome badge shall be draped in the approved manner at all correctional institutions immediately upon the determination that a peace officer has been killed in the line of duty. Such draping shall continue through the day of the funeral or as deemed appropriate by the Director.

No draping of the departmental regulation dome badge shall occur for other than peace officers killed in the line of duty except as authorized by the Warden/RPA.

The draping of the Badge shall be a 3/4-inch wide band of black elastic cloth placed over the bottom portion of the badge, covering the number on the badge. This is the tradition of peace officers showing their unity after the tragic loss of a fellow peace officer. Example:

33020.9.7 Honor Guard Uniform

Each institution shall establish a uniformed Honor Guard for ceremonial functions. Such Honor Guard shall be attired, when performing in the Honor Guard's official capacity, as stated in this section. Each institution shall purchase the items listed as "Honor Guard Accouterments" for use of personnel assigned to this unit.

The complete Class "A" uniform shall be worn when serving in the Honor Guard at an official function. Due to the high visibility of personnel assigned to an Honor Guard, this uniform shall be in excellent condition with highly polished shoes or boots. In addition to the normal Class "A" uniform, the following "Honor Guard Accouterments" shall be worn:

- Gold colored rectangular rayon break-away bib-scarf.
- Plain white gloves of cotton and nylon blend fabric.
- Normal gold colored nylon cord aiguillette, 3/16 inch in diameter with one metal ferrule 3 inches in length.
- Headgear - stetson hat, campaign hat and black beret.

Prior to any use of the Honor Guard, an inspection of the unit shall be conducted to establish that each member is attired uniformly and will hold the Department and themselves in the highest of esteem. If weapons and/or duty belts, for example, are deemed appropriate, care must be taken to assure uniformity.

Note: Blousing of boots is not considered appropriate.

33020.9.8 Special Emergency Response Team (SERT) Uniform

The official uniform and insignia for SERT, shall be as described in this section. The SERT uniform shall be worn by SERT members only, and only when activated for deployment or training.

Uniform Designations

The following are uniform designations for SERT:

- ALPHA (A) uniform: Fatigue uniform with all individual and team-issued equipment.
- BRAVO (B) uniform: Fatigue uniform with web belt only.
- CHARLIE (C) uniform: Fatigue uniform only.
- DELTA (D) uniform: Fatigue trousers, T-shirt (olive drab), boots, and cap only.
- ECHO (E) uniforms: Physical training clothing.

If activated for deployment, SERT members shall report for duty in the ALPHA uniform unless otherwise specified by the SERT Commander.

Specifications

SERT members are authorized the following uniform and accessory items:

- Fatigue shirt: U.S.Armed Forces M-65, Woodland Camouflage BDU, 50% Nylon/50% Cotton twill, infrared reflective dyes, four bellows cargo pockets, covered button flaps, double fabric elbows, three-button tab cuff with pen slot in pocket.
- Fatigue trousers: U.S.Armed Forces M-65, Woodland Camouflage BDU, 50% Nylon/50% Cotton twill and infrared reflective dyes.
- Fatigue field coat: U.S.Armed Forces M-65, Woodland Camouflage, Military Quarpen water repellent finish on a Nylon/Cotton Sateen material, hideaway hood, large cargo pockets, epaulets, Velcro cuff closures and storm-flapped zippers.
- U.S.Armed Forces M-65 coat liner.
- Beret, black in color, wool felt with sweatband and insignia stiffener.
- Choice of boots as follows:
    - Black, full leather, military-type combat, plain-toe, nonzippered (all metal surfaces shall be covered with dark emblem enamel).
    - U.S.Army jungle boots; olive drab Nylon and Cotton web sides.
    - Swat boots, black, lightweight leather, cleated vibram sole, waterproof.
- U.S.Marine Corps Camouflage Cap.
- 100% Polyester, full face, olive drab in color, or knit pullover watch cap/full face mask.
- Military web belt, 1-1/4 inch width, olive drab in color, fitted with tip and roller buckle (black).

- Short sleeve T-shirt, crew neck, olive drab in color.
- Heavy, black leather gloves.
- Woodland Camouflage poncho, lightweight, 70 Denier Nylon, Urethane waterproofing with pack flap.
- Canteen and cover (LC-1 or LC-2): One quart plastic canteen and lined canteen cover, olive drab in color.
- Black leather, plain baton ring.
- Sheath or folding knife, maximum 4-inch blade.
- Mirror (plastic, 3 x 5 inches approximately). Flashlight and penlight.
- Wooly Pully sweater: 100% wool, crew neck, color - U.S.Marine Corps olive drab and no epaulets (Optional).

Insignia

- Insignia shall be worn as follows:
- A subdued departmental patch (black on olive drab) shall be worn on each sleeve of the fatigue shirt and fatigue field coat and shall be centered on the sleeve 1/2 inch below the shoulder seam.
- A subdued insignia worn above the departmental patch on the upper right sleeve of the SERT camouflaged uniform shirt and field jacket.
- The insignia will read SERT INSTRUCTOR in black embroidered upper case letters, 3/16" x 5/16" on olive drab colored cotton twill background 3/4" x 3" with a black embroidered boarder 1/8" wide. The tab will be in a semi-cresent shape to match the top of the departmental patch.
- The SERT instructor tab will be authorized for wear by those SERT members who successfully complete the CDC SERT INSTRUCTOR course.
- A subdued name tape (black on olive drab) shall be worn on each fatigue shirt and field coat, centered 1/8-inch above the right breast pocket.
- A subdued name tape (black on olive drab) bearing the initials of the institution to which the member is assigned, shall be worn on each fatigue shirt and field coat, centered 1/4-inch above the left breast pocket.
- Sergeants shall wear a black metal chevron on each collar, 3/4-inch from and parallel to the front edge of the collar and centered on the SERT camouflage cap.
- Lieutenants shall wear a black metal rank insignia on each collar, 3/4-inch from and parallel to the front edge of the collar and centered on the SERT camouflage cap.
- Emblems or pins which represent the institution of assignment (not to exceed 1 x 1-1/2 inches in size), may be worn with the prior approval of the Deputy Director, Institutions Division.

33020.10 Uniform Hat/Cap/Tie Requirements - Custody

Custody employees shall wear a Class "A" hat while in Class "A" uniform at all times when outside of an enclosed building. This shall include entering and/or leaving the work site, performing duties in a yard or other outdoor setting, and while traveling from one area of an institution to another.

Under the above conditions, the Class "A" hat, the Class "B" cap, or the trooper cap may be worn while the employee is wearing an optional uniform.

Wearing of the Class "B" cap or trooper cap requires approval of the Warden.

Employees shall wear a regulation tie when the battle jacket is worn.

33020.11 Regulation Uniform Fire Chief and Firefighter

The regulation fire chief and firefighter uniforms shall be as specified in this section.

33020.11.1 Official Uniform Fire Chief Class "A"

The below specified uniform shall be worn by all institution fire chiefs.

- Regulation double-breasted coat.
- Regulation trousers.
- Black leather belt 1-1/2 inches or 1-3/4 inches width with single prong tongue buckle (no decorations).
- Black clip-on or breakaway tie.
- Round top, white vinyl, fireman's hat with insignia.
- Regulation long sleeve shirt (white).
- Black plain-toe shoes or boots (without buckles); black socks (solid color).
- Regulation Fire Chief badge; hat and collar insignia.
- Departmental Fire Service shoulder patch attached to regulation shirt and jacket.
- Departmental nameplate (blue lettering on gold plate).

Coat

The regulation double-breasted coat specifications shall be navy blue No. 368-16 Metcalf Serge or Visa Serge (100% texturized Polyester/Dacron blend, Department approved). Double-breasted, six buttons (three each side); badge holder left side; two lower flaps (dummy pockets) with flap 2-1/4 inches deep by 3-3/4 inches wide to be in proportion to coat size. Sleeve buttons, three each sleeve; F.D. braid 1/2-inch gold; 3-1/2 inches from bottom of sleeve. Lapel to be notched; 4-1/2 inches wide; double stitched 3/8-inch. Trim to be 3-1/2 inches from bottom of sleeve; two 1/2-inch gold color strips; 1/4-inch apart.

Trousers

The regulation trouser specifications shall be navy blue No. 368-16 Metcalf Serge or Visa Serge (100% texturized Polyester/Dacron blend Department approved). Two back pockets; two front pockets; seven keystone loops; zipper fly; and button on left back pocket.

Dress Shirt

The regulation shirt shall be a white dress shirt, Flying Cross No. 5400 or equivalent, standard collar, medium points; either French cuff, barrel cuff or short sleeve optional with wearer.

Hat

The round top fireman hat specifications shall be white vinyl top; gold color braid chin strap; gilt buttons; and Holbrook embroidered flame visor.

33020.11.2 Official Uniform Firefighter Class "A"

The below specified uniform shall be worn by all institution firefighters.

- Regulation battle jacket, navy blue with insignia.
- Regulation trousers, navy blue color.
- Regulation shirt, white.
- Black leather belt 1-1/2 inches or 1-3/4 inches wide with single prong tongue buckle (no decorations).
- Regulation firefighter hat (blue) with insignia.
- Black plain-toe shoes or boots (without buckles); black socks (solid color).
- Regulation firefighter badge and collar insignia.
- Black clip-on or breakaway tie.
- Departmental Fire Department shoulder patch attached to regulation shirt and jacket.
- Departmental nameplate (blue lettering on silver plate).
- A firefighter who has been designated as assistant fire chief shall wear the same uniform as the fire chief. The only difference shall be the assistant fire chief shall wear the assistant fire chief badge and display only one braid around the dress coat or battle jacket.

Battle Jacket Firefighter

The battle jacket specifications shall be as follows:

- Patch pocket; industrial style, 32200 or H.S. 759.
- Jacket shall have a care label permanently affixed and also have size label showing fiber content and WPL number.
- Fabric: Milliken Mills #4936-3064; Color: navy blue; Content: 100% Polyester: Weight: 13-1/3 ounces; Weave: Elastique or equivalent.
- Waist length jacket with a zipper to the bottom of the lapel. To have peak lapels and a bi-swing back. A cloth belt is to be stitched down the back. Side adjustment straps, shoulder straps, two breast patch pockets with flaps, side body, one inside pocket, nylon lined body and sleeve, and inner vitals including shoulder pads. One badge tab and no waistband.
- Two box pleated breast pockets with flaps with Velcro at the edges of the flaps. Flaps to button with silver-gilt F.O. buttons. One inside pocket on the right side. Bi-swing two-piece back (bi-swing connected to Lastex). Sweat shields or the same material as jacket. Turn-up bottom approximately 2-1/4 inches.
- After jacket has been completely sewn and ready for pressing, it shall be pressed on both utility presses and shaping presses. All loose threads shall be removed. All proper size tags, content labels and care instructions shall be permanently affixed to the garment.
- Sleeve Piping: F. O. braid 1/2 inch silver, placed on each sleeve from seam to seam 3 inches above the cuff.

Work and Dress Shirt (Class "A" and Class "B")

The regulation shirt specifications shall be as follows:

- Short sleeve or long.
- White, 65% Dacron Polyester/35% Cotton.
- Shall have badge tab over the left pocket; a permanent collar stay; two plain pockets with peaked pocket flaps; and a pencil compartment on the left pocket.
- Reference: Flying Cross or equivalent.

Trousers (Pacer)

The uniform trouser specifications shall be as follows:

- Each regulation trouser shall bear the following label guaranteeing genuineness of the material used; "We guarantee this cloth to be 100% texturized Polyester/Dacron".
- Color: navy blue, 100% texturized Polyester/Dacron material.
- The trousers shall be made using a modified uniform pattern, having a plain front with straight side pockets and two back pockets. The front pockets shall have a minimum opening of 6 inches and shall be 5-1/2 inches by 6 inches deep from the bottom of the opening. They shall be stitched, turned, and restitched. The back pockets shall be made with a Reese PW automatic machine and shall be finished on the outside with an exposed top and bottom cord. The left hip pocket shall be button through. The front pockets shall have straight bartacks, and each back pocket shall be bartacked with a triangular bartacking machine.
- The waistband shall be a minimum of 2 inches wide and shall be closed with a crush-proof hook and eye, the eye being bartacked for stability. The waistband curtain shall have snugtex and be 65% Polyester/35% Cotton with a durable press finish and shall match the color of the pocketing. The waistband curtain twill shall have a minimum thread count of 66 x 56, and there shall be 2.90 yards per pound. It shall be attached with a rocap machine. The waistband stiffener 3/4 inches in width shall be sewn into the waistband on the front of the trouser from side seam to side seam to prevent waistband rollover. The trousers shall have a continuous closed waistband.

- All pocketing shall be 65% Polyester/35% Cotton with press-to-last finish. The front pockets should be constructed from one piece of material with a woven reinforced area starting at the bottom and extending approximately 3-1/2 inches. From the bottom up, it shall be woven 72 x 60. Since this reinforced area assures double wear, no other type pocketing shall be acceptable. All pocketing shall be black in color.
- The right fly lining and crotch lining shall be of the same fabric and color as the waistband curtain. The right fly lining shall be sewn to the left fly below the zipper. The inside left and right flies shall be fused with an interlining for stability. A separate French fly made of the outer fabric shall be sewn to the inside right fly.
- There shall be five belt loops on waist sizes 28, 29 and 30 and a minimum of seven on all sizes over 30. The loops, shall be 2-1/2 inches wide at the top and tapering to 1-1/2 inches at the bottom. Except for the back loop, which shall be tacked on, all loops shall be sewn into the bottom of the waistband and into the rocap.
- The trousers shall be closed with a Talon 42 Nylon zipper with a memory lock slider. The zipper tape must have been treated for Durable Press finishing. There shall be a brass bottom stop at the base of the zipper chain. A straight bartack shall be sewn through from the outside of the garment to the inside at the bottom of the fly. It shall be sewn through the zipper tape, the right and left fly, and the right fly lining. The right and left fly shall be joined by an additional bartack located below the bottom zipper stop on the inside of the trouser. This bartack will reduce stress on the left fly and zipper.
- The entire trouser shall be seamed with Polyester core thread and the seat seam shall be stitched with a tandem needle seat seaming machine.
- All workmanship shall be first class structure with all loose threads removed. They shall be pressed completely and properly. Side seam, inseam, and seat seam shall be pressed open. There shall be a Texpak clip attached.
- The trousers shall have a sewn-in label giving care instructions and shall be marked with lot number, size, fiber content and WPL number.

Hat

The regulation fireman hat shall be navy blue No. 386-14, Metcalf, Wanskuk Serge. Black leatherette chin strap held by silver colored "F.D." buttons.

33020.12 Optional Uniform - Fire Chief and Firefighter

Following are specifications for the optional uniform which may be worn by the fire chief and firefighters.

Battle Jacket (Fire Chief)

The fire chief battle jacket specification for the optional uniform shall be as follows:

- Material: Navy blue No. 386-16, Metcalf Serge or Visa Serge (100% texturized Polyester/Dacron blend Department approved).
- Jacket shall be Eisenhower style, waist length of approximately 21-3/4 inches on a size 40, and have peak lapels. The inside of the jacket shall contain shoulder pads, sleeve heads, chest piece inner front, armhole tape and cuff inner lined. The entire body and sleeve shall be fully lined.
- 180-count Rayon Satin, pre-shrunk lining shall be colorfast and perspiration resistant.
- Front shall be plain with box pleated patch pockets, flaps, shoulder straps and badge tab. Inside facing of jacket shall be the same as the outer fabric. The front shall be zipper front with a zipper no less than 14 inches long. The back shall be seamed (two-piece back) bi-swing, ends of each bi-swing held in place with a strip of elastic. There shall be a separate waistband cut in two pieces, and the waistband shall be approximately 2-1/2 inches wide with the adjustable straps on each side over hips.
- The sleeves shall be standard coat style, set in, and shall have a 2-inch hem. The bottom of the sleeve shall have an inner lining. Two sleeve buttons shall be gold colored fire chief bugles.
- There shall be two outside box pleated patch pockets measuring approximately 5 inches wide and 6 inches deep, and there shall be scalloped flaps.
- Collar shall be properly inner-lined and under collar properly shaped.
- Shoulder strap shall be made of the same fabric as the jacket and shall be sewn into the sleeve seam, cross-stitched, and the end of the shoulder strap tacked to the jacket at the neck.
- Badge tab shall be made of the outer fabric, be 3/4-inch wide with two eyelets spaced vertically 1-inch apart (center to center), and the badge tab shall be centered above the left flap. Two, 1/2-inch gold stripes, 1/4-inch apart.

Blazer (Fire Chief)

The blazer specifications shall be as follows:

- Fabric: grey - 100% texturized Polyester.
- Form fitting classic-style jacket, long sleeve, two button front single breasted with soft shoulders. There shall be two 1-inch welted pockets just below the waistline with flaps. The back shall be plain with a center vent.
- All sewing shall be done with Polyester core thread.
- Tailored with good quality, matching lining with coat fronts, employing standard practices used in coat construction. For shape retention, the collar and front facing shall be interlined with heavy "armo", "hypo" or pellon-type fabric.
- Regular coat style sleeves set in with single needle having a minimum 2-inch hem for alteration. Two sleeve buttons shall be gold colored Fire Chiefs bugles.
- Two patch-type pockets just below the waistline. One patch-type pocket over left breast.
- There shall be a departmental Fire Department shoulder patch sewn onto the breast pocket.

Trousers (Fire Chief and Firefighter)

The trousers specifications shall be the same as Firefighter Class "A" trousers.

Light Weight Jacket - (Fire Chief and Firefighter)

The light weight jacket specifications shall be as follows:

- Fabric: 100% Nylon Oxford Weave, water repellent.
- Color: Navy blue.

- Windbreaker style with a zipper front closure to the neck and plain back with shoulder straps.
- The front shall be constructed of two pieces on each side reaching from the bottom of the jacket to the shoulder seam. These two pieces shall be joined with welt stitched seams. Shirred elastic each side at waist for neat fit. The inside facing of the jacket shall extend from each bottom of jacket around neck where a zip-in liner can be attached. The jacket may open at the bottom on the side seams for handgun usage, closeable with velcro.
- There shall be vertical front panels that form utility side pockets. The openings shall be bartacked at top and bottom for extra strength. Two breast pleated patch pockets with flaps to button. The cuffs are to be pointed with two buttons for cuff adjustment.
- Shall be closed with a No. 5 metal style zipper with automatic lock and pre-shrunk tape. The zipper tape shall be compatible with outer fabric color.
- The collar shall be top-stitched with collar points long enough for a neat appearance.
- Shall be made in a first-class manner. Work clothing-type jacket will not be acceptable. All loose threads shall be removed. Jacket must be pressed with proper pressing equipment and shall be properly shaped.
- There shall be permanently affixed size and care instruction labels.
- References: Fechheimer Bros. No's 42155, 42156 and 42166, Horace Small No. 2503, or equivalent.

Lining (Optional)

The optional lining specifications shall be as follows:

- Fabric: Entire liner shall have an outer shell of 70 Denier Taffeta-faced and 50 Denier Nylon Taffeta-backed. Shell may be of 88-count Tricot alternate.
- The liner should be full cut, long enough to properly fit jacket and should have shirt style sleeves, properly bound and safety stitched. There shall be knit wristlets at the end of each sleeve.
- There shall be one right inside patch pocket bound with a proper width bias binding.
- There shall be a zipper all around the outside of the liner so that the liner may be properly zipped into the jacket.
- Shall be sewn with Polyester thread and have permanent size and care instruction label.
- References: Fechheimer Bros. No. 32704, Horace Small "C", or equivalent.

Foul Weather Jacket - (Fire Chief and Firefighter)

The foul weather jacket specifications shall be as follows:

- Fabric: 100% Nylon super twill.
- Color: Navy blue.
- Body and sleeve shall be lined with 1/4-inch polyform quilted to 70 Denier Nylon Taffeta-faced with nonwoven back, or to 88-count Nylon Tricot.
- Borg 1/2-inch Orlon Pile for the top collar. The under collar shall be of the same fabric as the outer shell and the collar shall be interlined,. Collar shall be attached so there is a clean edge. There shall be a storm flap made of this outer fabric.
- Concealed zipper front, waist or 3/4 length separate waistband, five-button front and shoulder straps. Buttons to reflect either Firefighter scramble or Fire Chief's bugles.
- Coat style sleeves. The bottom of sleeves shall be interlined with nonwoven fabric. There shall be concealed wristlets at the bottom of the sleeves. The bottom of the sleeve shall be vinyl bound 1/4-inch to shell.
- There shall be two box pleated patch pockets finished approximately 6-1/2 x 7 inches, with three-pointed scalloped flaps and snap fasteners at each corner. The flaps shall have a firm interlining. Pockets shall have a firm interlining covered with Polycotton so as to create a hand-warmer pocket with an opening of approximately 5-3/4 inches on each side. The patch pockets shall be double stitched to the garment and the left breast pocket shall have a pencil compartment with an opening through the top of the flap. There shall be two pockets, one on the left side and one on the right side. All pocket flaps shall be interlined and flaps shall be bartacked at both ends.
- There shall be a badge tab of the outer fabric approximately 3/4-inch wide with two metal eyelets spaced vertically 1-inch apart and centered 2-1/2 inches above the left pocket flap.

Work Uniform Trousers - (Fire Chief and Firefighter)

The work uniform trousers specifications shall be as follows:

- Material: 65% Polyester/35% Cotton, 8-ounce Twill with Soil Bar (or Nomex).
- Color: Navy blue.
- Shall be made using a uniform pattern having a plain front with Quarter-top pockets, watch pocket, 3/4 inch drop belt loops, waistband curtain with Ban-rol or equivalent.
- References: American Mode (No. 8827-8829), Walking Tall (No. 9949) or equivalent.

Jacket and Raincoat - (Fire Services)

The jacket shall be Lee, navy blue color, 65% Dacron Polyester/35% cotton. Matches trousers, patch pockets. Liner--optional.

The raincoat shall be a long black, navy style with detachable lining.

The Class "B" cap specifications shall be as follows:

- Material: 100% Polyester. Seamless front baseball style cap with mesh or cloth back. Round top with adjustable head size. Black in color.
- Shall favorably compare with the Hanes cap.
- Insignia: Fire Chief's bugles or Firefighter's scramble.

The cap:

- Shall be worn in a bill-forward position.

- Shall not be worn with the Class "A" jacket.
- Shall be worn in a manner so as not to bring discredit to the uniform or the Department.

33020.13 Uniform Accessories

Only approved accessories and equipment as described in this section shall be worn on or with the uniform.

33020.13.1 Departmental Awards

The Department has authorized the awarding and wearing of medals and ribbons to peace officers, both individual and unit awards, as stated and explained in DOM 31030 of this manual. These awards, in the order of their seniority, are: The Medal of Valor; The Corrections Star (Gold); The Corrections Star (Silver); The Distinguished Service Medal; and the Unit Citation. Non-departmental awards and citations may be worn, upon approval of the Warden. Awards shall be worn on the Class "A" jacket as follows:

- One-quarter inch above the right breast pocket. The regulation nameplate shall be placed 1/4-inch above the award(s).
- If one award ribbon is worn, it shall be centered on the pocket between the regulation nameplate and the pocket.
- If two award ribbons are worn, they shall be placed end-to-end with the senior ribbon to the inside and centered on the pocket between the regulation nameplate and the pocket.
- If three award ribbons are worn, they shall be placed end-to-end with the senior ribbon to the inside and centered on the pocket between the regulation nameplate and the pocket.
- If four award ribbons are worn, there shall be one row of three ribbons on the bottom as above. The fourth ribbon, most senior, shall be placed singularly above the tow of three ribbons with the regulation nameplate 1/4-inch above it. The two rows of ribbons shall be 1/8-inch apart.
- If five award ribbons are worn, there shall be one row of three ribbons on the bottom and one row of two ribbons on the top. They shall be 1/8-inch apart with the regulation nameplate 1/4-inch above them.
- If six medals are worn, there shall be one row of three medals on the bottom and one row of three medals on the top. They shall be 1/8-inch apart with the regulation nameplate 1/4-inch above them.

The complete set of ribbons and the order of their placement on the Class "A" jacket is as illustrated.

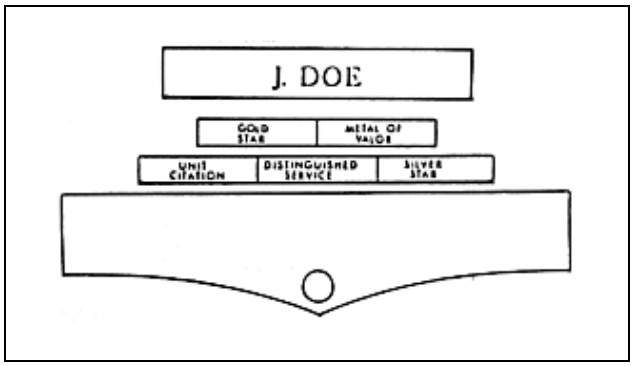

State Medal of Valor Pin, 25-Year Service Pin, and other state service/award pins shall be worn only on the Class "A" jacket and shall be centered, 1/4-inch above the nameplate. If two pins are worn, they shall be centered 1/4-inch apart and 1/4-inch above the nameplate.

The service emblem, employee organization pin, and the Safety Award Pin may be worn as a tie pin. Other tie pins or tie clasps may be worn but shall be small and plain without stones or other decorations. They also shall be gold in color in keeping with the gold color of all other metal accessories. Tie pins depicting handcuffs, pigs, guns, etc., shall not be worn.

33020.13.2 Hat Shields

The hat shield worn by officer, sergeant, lieutenant, and captain shall be as follows:

- Blue soft enamel lettering.
- Gold-plated center seal of the State of California.
- Base material of back shall be 16 gauge brass.
- Single screw back with one anchor pin.
- The words, "State Department of" shall encircle the state seal with the word "of" centered at the base of the 3/32-in Gothic lettering. The word "Corrections" shall be centered across the width of the base in 1/8-inch Gothic lettering.

The hat shield worn by the fire chief shall be five crossed trumpets on gold plated 1-1/2 inch diameter round backing. Single screw with one anchor pin (Blackington No. A2811).

The hat shield worn by firefighters shall be a Maltese cross on nickel plated 1-1/2 inch high and 1-1/2 inch wide round backing. Ribbon at the top of the circle with "Firefighter" in blue Gothic lettering. Circle with fireman's scramble (hat, ladder, axe, pick, pole and trumpet). Lower tip to have the word "California" with the "f" on the left side and the "O" on the right side. Single screw with one anchor pin (Blackington No. 8501).

33020.13.3 Departmental Shoulder Patch

The following described insignias have been adopted as the departmental emblems and shall be used as the departmental shoulder patches.

All uniformed peace officers shall wear the shoulder patch described below.

Peace Officers

The shoulder patch shall be in the shape of a shield with the words "Department" above the state seal.

The shoulder patch shall be 3-5/8 inch by 4-1/2 inch.

Background material shall be 7-1/2 ounce Cotton twill, mercerized and sanforized. Material count to be 88 by 42, first quality and no milling ends or finishing seconds. Material shall be certified washable by the American Institute of Laundering.

Colors shall be as shown on the detail below:

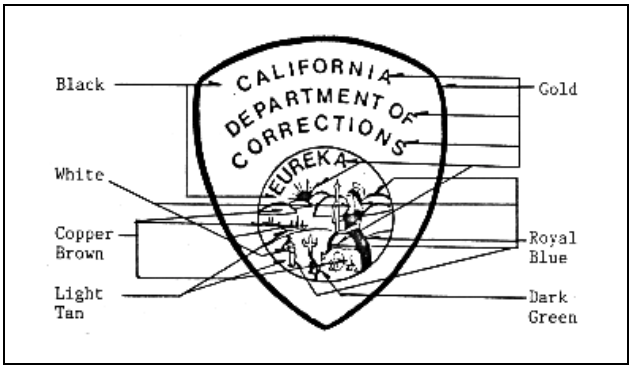

- The patch shall be embroidered. Thread shall be Rayon yard, not to exceed 150/2 Denier, and shall be first-quality continuous filament, regenerated cellulose type, colorfast and approved by the American Institute of Laundering. Bobbin thread shall be Nylon.
- Border stitching shall be applied to emblems after loom operation. Border shall consist of seven separate threads, including five 105/2 Denier Rayon yarn for top portion and two 3-cord mercerized cotton threads for underneath or back side of emblem. Edge density shall be at least 26 per inch. End threads of border shall be pulled tight and secured to back side of emblem by a nontoxic adhesive.
- The shoulder patch shall be attached on the left and right sleeves of all uniform coats, jacket, shirt and coveralls (except rain gear). The top of the patch to be 1/2-inch below the sleeve head seam and in such a manner that a line bisecting the center of the patch shall be perpendicular to the ground when the garment is worn. Shall be sewn on garment with colorfast medium gold thread, not cross stitched.
- Shoulder patches shall be kept in good condition. When no longer in good condition, shoulder patches shall be replaced.

Note: Department shoulder patches are stocked by local uniform vendors. Employees shall purchase their shoulder patches.

Fire Service Employees

Every fire service employee shall wear the Fire Department shoulder patch described below.

The Fire Department shoulder patch shall be in the shape of a shield and shall be 3-5/8 inches by 4-1/2 inches.

Background material shall be 7-1/2 ounce Cotton Twill, mercerized and sanforized. Material count to be 88 by 42, first quality and no mill ends or finishing seconds. Material shall be certified washable by the American Institute of Laundering.

Background shall be royal blue with all lettering and patch border shall be gold. Colors shall be as shown on the detail below:

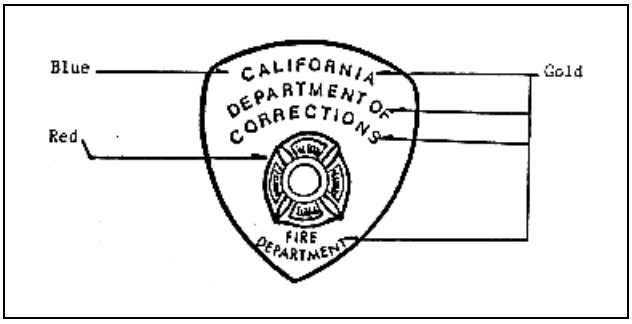

Embroidery: The words "Department" in gold on top of an eight-pointed cross formed by four arrowheads joining at their points with the colored State of California seal in the center. The cross and seal shall have red borders. The words "Fire Department" in gold at the bottom of the patch.

Border stitching shall be applied to emblem after loom operation. Border to consist of seven separate threads, including five 150/2 Denier Rayon yarns for top portion and two 3-cord mercerized cotton threads for underneath or back side of emblem. Edge density shall be at least 26 stitches per inch. End threads of border shall be pulled tight and secured to back side of emblem by a nontoxic adhesive.

Emblem shall be sized with a nontoxic harmless sizing that firmly welds the buckeram and bobbin threads directly to embroidery and background material.

The shoulder patch shall be attached on the left and right sleeves of all uniform coats, jackets, shirts and jumpsuits. The top of the patch to be 1/2 inch below the sleevehead seam and in such a manner that a line bisecting the center of the patch would be perpendicular to the ground when the garment is worn. To be sewn on garment with colorfast medium gold thread, not cross-stitched.

Shoulder patches shall be kept in good condition. When no longer in good condition, shoulder patches shall be replaced.

Individual employees shall be responsible for the purchase of his/her shoulder patches except for those on the Nomex wear which the institutions shall provide.

33020.13.4 Nameplate

All uniform personnel and other personnel who have direct contact with inmates, teachers, counselors, cooks, nurses, etc., shall wear and clearly display a nameplate.

Nameplates shall be phenolic engraving stock 3 inches long by 3/4-inch wide by 3/32-inch thick with white letters on black stock. The corners may be slightly rounded to protect the wearer's clothing. The name letter size shall be 1/4-inch high and shall be composed of the first initial of the first name, followed by a space, followed by the entire last name, centered both top to bottom and side to side. Regulation nameplate shall be worn on the outer garment unless exception is made by the Warden.

Fire Chief nameplate shall be white lettering on black plate.

Firefighter nameplate shall be white lettering on black plate

Exceptions

Fireservice employees may be allowed to have a Maltese or EMT insignia on the left side of their nameplate, if they qualify for them.

A job steward/board member may add that title to the nameplate as has been the practice (illustrated below). The cost shall be incurred by the employee. The lettering size of such title shall be 1/8-inch high. When placed on the nameplate, the grouping of name and title shall be centered both top to bottom and side to side.

Example:

33020.13.5 Service Stripes

Service stripes shall be worn on the left sleeve of the Class "A" jacket and on the left sleeve of the long sleeve shirt. Service stripes shall be affixed 3/4-inch above the departmental stripe of the jacket and 3/4 inches above the cuff of the shirt. One service stripe shall be worn for each three years of service as a peace officer.

Service stripes shall be gold thread sewn to a black felt material background with a heat-seal treatment on the back.

The overall size of each service stripe is approximately 3/8-inch by 2 inches.

Service stripes shall be sewn on the garment with black thread sewn along the border of the stripe. Service stripes on the jacket shall be placed as below, centered between the seams on an approximately 30-degree angle. Service stripes on the jacket shall be placed as below fully in front of the sleeve crease on an approximately 30-degree angle.

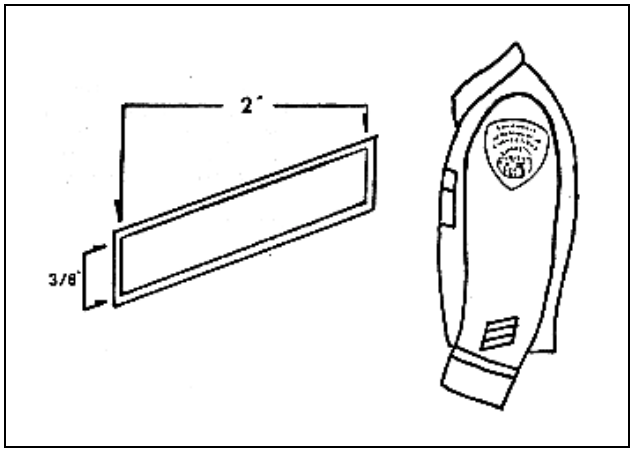

Maltese Cross

For each five years of service with the Department, uniformed fire service employees shall wear a Maltese cross on the left sleeve of the Class "A" jacket and on the left sleeve of the long sleeve shirt. The crosses shall be affixed 3/4-inch above the departmental stripe of the jacket and 3/4-inch above the cuff of the shirt in horizontal row(s).

33020.13.6 Rank Insignia

Collar rank insignia worn by captains, lieutenants, sergeants, and fire chiefs and institution firefighters shall be affixed 1/2-inch and parallel from the inner edge of the collar. The bottom edge of the insignia shall be 1-inch from the collar point. Acting sergeants shall wear collar rank insignia only.

Captains shall wear double bars, gold color, approximately 3/4-inch by 3/4-inch (Vanguard #95 Captain, or equivalent).

Lieutenants shall wear single bar, gold color, approximately 1/4-inch by 3/4-inch (Vanguard #115 Lieutenant, or equivalent).

Fire chiefs shall wear five crossed trumpets, gold color on 7/8-inch round backing (Everson-Ross No. F-4028, Blackington No. A2871, Darley and Company No. G-469, or equal).

Firefighters shall wear fireman's scramble, silver color on 7/8-inch round backing. Single or double-clutch clasp (Blackington No. 3029).

Sergeant chevrons, police style, gold color metal, 5/8-inch high by 3/4-inch wide with clasps shall be purchased by the institution and worn only by acting sergeants (Vanguard #21 Sergeant, or equivalent).

Rank insignia worn on the epaulets by captains and lieutenants shall be affixed 1-inch in from the outer edge of each shoulder seam of the regulation jacket or coat.

Captain shall wear double bar, gold color, approximately 1-inch by 1-inch (Vanguard #34 Captain).

Lieutenants shall wear single bar, gold color, approximately 3/8-inch by 1-inch (Vanguard #34 2nd Lieutenant).

33020.13.7 Sleeve Chevrons, Sergeant

Sergeant chevrons shall be worn on each sleeve of the uniform jacket, and short and long sleeve shirt. Chevrons shall be three gold stripes on a black background of cotton twill., 3-7/8 inches from top to bottom, 3-1/8 inches wide. The interlocking stitch, 700 for each stripe, and the stripe shall be vat dyed Y-2-gold. The backing shall be of 28 x 24 Crinoline. The chevron shall be placed with the tip of the chevron 1/2-inch from the bottom of departmental shoulder patch. The chevron shall be sewn with black thread with professional skill.

33020.13.8 Regulation Tie

The regulation tie specifications shall be as follows:

- Solid black only, no design or decorative texture.
- Smooth surfaced, dry clean only fabric.
- Not to exceed 18 inches in length, or to fall below the belt line.
- Clip-on fastener type only. Tie shall not be square cut on bottom.
- References: Broome 455-BO-3, or equivalent.

33020.13.9 Official Department Belt Buckle

An official Department belt buckle has been approved by the Director. This buckle is the only buckle that may be worn in place of the standard belt buckle other than the Warden approved institutional belt buckle. The approved departmental buckle approximates: 2 x 3 inches, rectangular in shape, with rounded corners per reproduction below:

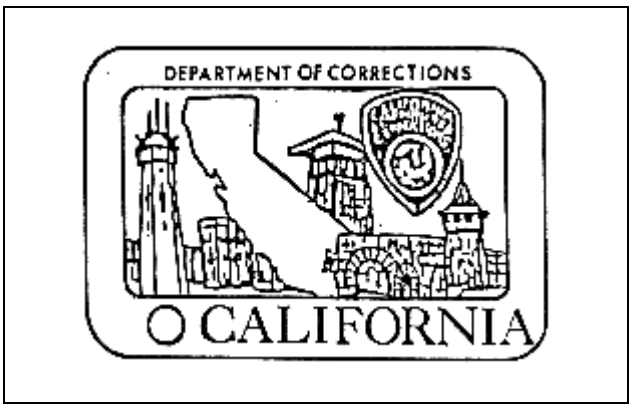

33020.13.10 Regulation Shoes

Male

Male employees may wear shoes or boots that meet the following general specifications as items of the regulation uniform:

- Black leather, plain toe, conservatively designed. No buckles. No design in the leather, shall be smooth texture.
- In addition to the plain toe, the toe design shall be round without a bead encircling the toes.
- Shall approximate dress military styling. Shoes shall be shined at all times.
- Heel not to exceed 1-1/2 inches in height.
- No tennis shoes, cowboy, engineer or logger-style boots.
- References: Boots: Acme 9080, Rocky 5066; shoes: Rock 2025; Thorogood 1267, 1253; or equivalent.

Female

Female employees may wear shoes or boots that meet the above general specifications except:

- Pump heel allowed, not to exceed 1-1/2 inches in height.
- References: Boots: Acme 610; Shoes: Rocky 115; or equivalent.

33020.13.11 Miscellaneous Accessories for Uniform Staff

The below specified accessories may be worn with the regulation uniform as appropriate:

- Sam Browne belt, black with basket-weave design. Metal shall be gold in color.
- Key pouches/clips, gold in color, when available, only State issue. Chains or lanyards are permitted.
- Enclosed snapping handcuff case. Black with basket-weave design.
- Flashlight holder shall be ring type on black leather. Metal shall be gold or black in color.
- Side handle baton holder shall be ring type on black leather. Metal shall be gold or black in color.
- Whistle, gold in color, metal only.
- Flashlight shall be black in color, either mini-mag or 3 "C" or "D" cell batteries only.
- Gloves shall be smooth black leather only with no "cut-outs". Both the body of the gloves and the fingers shall remain intact. No alteration of the gloves shall be permitted. Wrist high to 2 inches above the wrist in length. May be lined for warmth. Shall approximate the reference in appearance. References: Damascus #302, or equivalent.

No other accessories shall be worn while in uniform without the approval of the Warden.

There shall be no pipe holders, tobacco cases, glass cases, or other holders worn on or carried on the belt or affixed to the uniform except as approved by the hiring authority.

33020.14 Departmental Badges

In accordance with the requirements of PC 830.10, the Director has ordered the wearing and possession of the approved departmental regulation dome badge by all uniformed peace officer staff. Uniformed staff includes all part or full-time fire department, MTA, PIE and custody classification employees where the uniform is considered as part of their job description by the Department. All uniformed staff shall wear the regulation badge on the outer garment at all times while on duty unless exception is made by the Warden. Non-uniformed staff designated as peace officers shall possess the approved departmental flat badge.

Regulation Dome Badge

The Department shall purchase and provide to each uniformed peace officer employee, through the Academy, a numbered regulation domed badge upon the employee's successful completion of the Department's pre-service academy training.

Flat Pocket Badge

The Department shall purchase and provide each nonuniformed peace officer employee through the rank of CC-III, a flat pocket badge and badge holder. The flat badge shall be provided through the Academy upon the employee's successful completion of the departmental peace officer training course.

Optional Badge

All permanent uniformed employees may purchase a second, optional dome badge that meets departmental specifications if they so desire but shall bear the cost of the second badge. The optional badge shall bear the same number as the state issued badge.

All uniformed employees may purchase, at their own expense, a flat pocket version of the state-issued badge. The optional flat badge shall bear the same number as the state-issued regulation dome badge.

A purchase authorization slip containing the badge number assigned and signed by the Chief Deputy Warden or their designee shall be given to the employee, who shall place their own order with the designated vendor.

Captains and above desiring to purchase an optional flat pocket badge shall be required to obtain an authorization slip in the manner described above.

Employees authorized to order optional badges may request authorization slips and mail the signed slip, with a check for the amount of the purchase, directly to the name and address of the supplier identified by the procurement officer. Employees shall not purchase badges from any other supplier.

P&CSD

The P&CSD shall provide special badges to all Parole Agents and PAs. The P&CSD shall provide all custodial employees assigned to community correctional centers with a flat version of the special badge in lieu of the departmental regulation dome badge.

Law Enforcement and Investigations Unit

The Department shall provide badges to members of the Law Enforcement and Investigations Unit.

Fire Chiefs and Institution Firefighters

Fire department employee badges shall be purchased by each institution and provided in lieu of the approved departmental regulation dome badge. Badges shall also be provided for full-time civil service firefighters utilized at some institutions.

Temporary Badges

Badges that were being utilized at the institution and worn by staff on special assignments shall be retained by the institution as extra badges and loaned to employees in the event of a loss of, or damage to, the employee's state-issued badge.

The Department shall purchase badges from the designated vendor.

33020.14.1 Specifications

All uniformed personnel and nonuniformed employees designated as peace officers pursuant to CCR 3291(b), shall receive a departmental badge in accordance with the following specifications:

- Seven-point star badge (2-5/8 inches point-to-point).
- Gold plated. Base material and back to be 16-gauge bronze.
- Center seal of the State of California in full enamel color, 3/4-inch across.
- One-fifteenth inch blue enamel border surrounding the seal with the words "The Great Seal of the State of California" in gold letters.
- One-eighteenth inch wide indentation around the above mentioned border, gold.

- Three-sixteenth inch gold border surrounding indentation with words "Department" in 3/32-inch blue Gothic lettering, so centered as to leave room for 6-digit badge number on bottom of border.
- One-sixteenth inch smooth border around outer edge of badge points.
- Exposed portion of star points to be embossed with decorative design.
- One-fourth inch wide ribbon extending over bottom star point half way into left and right points. One and five-eights inches long in gold with blue 3/16-inch lettering designating appropriate classifications.
- Vertical pin clasp on back 1-7/8 inches long.

Officer

Same as described above, excluding ribbon of rank.

Fire Chief

The institutional fire chief shall receive a badge in accordance with the following specifications.

- Gold plated. Base material and back to be 16-gauge bronze.
- Two and three-quarters inches in height.
- Two inches in width.
- Shield configuration, eagle at top, ribbon across left wing of bird with blue Gothic lettering "CHIEF".
- Ribbon at top of circle with blue Gothic lettering "FIRE DEPARTMENT".
- Circle with center insignia--five crossed trumpets.
- Ribbon extending across bottom of badge, below circle, in semicircle with name of institution, (blue Gothic lettering).
- Blue Gothic lettering, lower tip of badge, "Calif".
- Vertical pin clasp on back.

Full-time Institution Firefighter

Badge shall be the same specification as fire chief with the following exception:

- Nickel plated.
- Ribbon across left wing of bird, blue Gothic lettering. "FIREFIGHTER".
- Center circle emblem shall have firemen scramble insignia (ladder, hat, crossed nozzles).

33020.14.2 Control of Badges

Due to the inherent threat to departmental security and the possible unlawful uses of peace officer badges, strict controls shall be maintained regarding departmental accountability and employee responsibility in the issue, use, and maintenance of departmental badges.

It is unlawful for any person, including employees of the Department not employed in a peace officer class, unless temporarily assigned to perform peace officer duties, to wear, exhibit, use or otherwise possess a departmental badge or a facsimile thereof without specific authority to do so.

Responsibility

Departmental employees possessing state-issued, or personal optional badges shall be held specifically responsible for the proper use and control of these badges. Loss or damage of departmentally-issued badges, loss of optional badges resulting from employee negligence, or willful failure to report loss of state-issued or optional badge shall be cause for adverse action.

Lost or Stolen

In the event that a state-issued or optional departmental badge is lost or stolen or the badge is damaged, the employee responsible for the badge shall submit a detailed written report of the circumstances within 24 hours of the discovery. The report shall be submitted to the senior administrator of the Department facility to which the employee is assigned. P&CSD staff shall submit the report to the Regional Administrator. Headquarters staff shall submit the report to the Chief, ISU.

The senior facility administrator, upon knowledge that a badge has been lost or stolen, shall:

- Cause a notice to be placed at the entrance gates of all institutions and copies of the notice to be mailed to local law enforcement agencies and the Academy. The notice shall contain the badge number and whether it was a state-issued or optional personal badge.
- After investigating and considering facts submitted, make a determination whether the badge shall be replaced by the Department or the employee, and whether the loss or damage was due to negligence of the responsible employee.
- Take appropriate action as indicated by the circumstances revealed during the inquiry.
- Require the facility's procurement officer to order a replacement badge with a new number from the Academy if it is determined that replacement will be made by the Department.

If it is determined that a badge is to be replaced at the expense of the employee, the employee shall submit a check for the replacement cost to the facility's procurement officer. Replacement costs are listed in the badge order form.

Note: These procedures for replacement in no way restrict the Department facility from temporarily lending the responsible employee a badge until a replacement badge is delivered to the facility.

Damaged

Damaged badge replacements will be ordered with the same numbers as the original state issued badge and the damaged badge shall be forwarded to the Academy for destruction.

Replacement of state-issued badges shall not be done until after a 30-day period to determine if recovery of the badge is possible.

Cannot be Recovered

If lost or stolen badges cannot be recovered, the badge's number will be retired and notices of this fact shall be distributed to all institutions and local law enforcement agencies and the Academy.

Replacement badges in such cases shall be issued, with different numbers by the Academy.

Lost or stolen optional badges shall not be replaced by the Department. The employee, however, retains the right to submit a claim through the established BOC procedures if circumstances warrant. Authorization to replace a lost or stolen optional badge may be withheld by the Warden if such loss was as a result of negligence in exercising proper control over the badge. Replacement may be permitted, at the expense of the employee, after a 30-day waiting period.

Employees shall not sell or otherwise transfer their badge to any other person.

33020.14.3 Procedure for Issuing Badges

Headquarters shall issue two documents allotting badge numbers to the Academy.

The administrator of the Academy shall establish and maintain an accurate and automated record of all departmental badges issued to peace officer employees. The Academy shall issue a badge number to each qualified employee in the peace officer classification, according to the blocks of numbers allotted to each rank group.

Once a peace officer employee is assigned a badge number, they shall retain said number throughout their departmental career.

Promotions of Transfers

All peace officer employees receiving promotions or transfers to another Department facility shall retain their state-issued badge. The receiving Department facility shall have the ribbon of the employee's promotional rank, if appropriate, affixed at the bottom of the badge. The receiving Department facility shall have the ribbon of the employee's promotional rank, if appropriate, affixed at the bottom of the badge. The institution or other Department facility shall issue the employee a temporary badge until the original badge is received from the vendor with the appropriate ribbon of rank affixed. The original badge shall then be returned to the employee.

Optional Badges

Peace officer and administrative staff transferring on promotion or promoting within their current facility who have purchased optional badges shall retain the badge. They may, at their discretion and expense, have the appropriate ribbon or rank affixed to their optional badge.

Termination of State Service

All peace officers terminating state service shall surrender their state-issued badge to the Department facility processing the termination. The returned badge shall be retained by the facility to be placed in the institution loaner badge file.

Retirement from State Service

Peace officers retiring from state service may request a retired state-issued badge upon approval of such retirement. The Department facility processing the retirement shall provide for the placement of a "RETIRED" ribbon on the state-issued badge. Retiring employees not desiring to retain the state-issued badge shall return the badge to the Department facility processing the retirement. The returned badge shall be placed in the institution loaner badge file.

33020.15 Regulation Uniform – MTA Series

MTA and Senior (Sr) MTAs shall wear the uniform specified in this section. In cases of specialty areas, such as surgery or administration, the individual institution may specify other dress codes.

Medical Smock

Shall be Khaki colored, four pockets and zippered front. The departmental MTA shoulder patch shall be attached to each sleeve. The departmental MTA badge shall be attached above the left pocket.

A total of six smocks shall be issued to each MTA and Sr MTA by the employing institution. The employee shall be responsible for laundering his or her own apparel and for maintaining it in good repair.

Smocks damaged beyond repair in the line of duty shall be replaced by the individual institution. Any other replacements shall be purchased by the employee.

Employees leaving state service shall, prior to institutional clearance for separation, return all smocks issued to them by the institution.

MTA Pants

The number of pairs of pants to be issued to each MTA and the specifications for the pants have not been determined.

MTA Jacket

Windbreaker style with a zipper front closure to the neck and plain back. Sand color.

33020.16 Regulation Uniform – Food Services Employees

All supervising cooks, bakers, butcher/meat cutters, and food services workers shall wear the departmentally approved uniform to distinguish them from inmates assigned to food services duties. This uniform shall consist of:

- Trousers: dark brown, equivalent to Big Mac or Levis.
- Shirts: tan, equivalent to Big Mac or Levis with the Department patch over the left breast pocket.
- Caps: brown and tan, baseball type, to match clothing, with the Departments' patch and the employee classification rocker arm above/atop the patch.
- Jackets: gold color, supervising cook Is, cooks, bakers, butchers/meat cutters, and vocational instructors (meat cutting and baking); sand color, supervising cook IIs.

Food service employees shall report to their assignment in clean uniforms that are in good condition.

33020.17 Protective Vests

The protective vest is a departmentally tested and approved item of safety equipment designed and manufactured to defeat penetration of knives, ice picks and other sharp objects thrust at the wearer.

33020.17.1 Mandatory Wear

Revised July 27, 1992

Protective vests shall be worn by designated staff when they are:

- In the vicinity of inmates within lockup units (unrestrained and/or restrained).
- Escorting inmates housed in lockup units anywhere on institution grounds.
- On a lockup unit tiers. Designated staff assigned to lockup units with solid front doors are exempt from mandatory wear requirements except during times of inmate feeding and when contact with inmates is anticipated.

Designated staff consist of the following classifications:

- Officer.
- Sergeant.
- Lieutenant.
- MTA
- Senior MTA.
- CC-I.
- CC-II.

Exemptions

The following are exempt from mandatory vest wear:

- Designated staff assigned to gun posts or isolated cage positions which preclude any contact with lockup inmates only while actually at such posts.
- Committee members participating in disciplinary or classification hearings in lockup units.

Environment

Environmental factors such as heat, cold, humidity, etc. shall not void the requirements to wear protective vests.

Optional Wear

For all other employees, visitors to the unit, and in all other instances, protective vest wear in lockup units is optional to the extent protective vests are available. Visitors and other nondesignated employees shall be notified that they have the option of wearing protective vests by a departmentally approved sign posted conspicuously near the entrance of each lockup unit.

Method of Wear

Protective vest shall be worn only in the manner prescribed by the manufacturer and the departmental training guidelines. Protective vests shall not be worn in any manner which might reduce their designed level of effectiveness.

33020.17.2 Procurement

Protective vests shall be purchased from the vendor by the Emergency Operations Section (EOS), through the BSS. Individual facilities shall not directly purchase any protective vests.

33020.17.3 Accountability, Issuance and Replacement

The procedures for accountability, issuance, and replacement of the protective vests are as follows:

Accountability

Each Warden shall appoint an Inventory Control Officer (ICO) who shall accept, inventory, and return (as necessary) the facility's protective vests. The ICO shall report directly to the Chief Deputy Warden who is responsible for the accountability of the facility's protective vests.

Issuance to Facilities

The EOS at headquarters shall issue the vests to facilities based on the following criteria:

- Lockup unit bed capacity.
- Number of designated staff assignments approved for lockup units on any one shift.
- Standby pool and size requirements.

Protective vests shall be provided to institutions by the Emergency Operations Section in a secure and expeditious manner. Upon receipt of protective vests from the Emergency Operations Section, the receiving institution's Inventory Control Officer shall inventory the shipment and report any discrepancies to the Emergency Operations Section.

Replacement

Replacement of the protective vests inserts and covers shall be accomplished as follows:

- Items determined to be unserviceable due to normal wear shall be documented in the institution's bi-weekly inventory with the following information:
    - Serial number of vest inserts.
    - Date placed into service.
    - Unit in which used.
    - Type of damage sustained.
- Items determined to be unserviceable due to damage beyond normal wear, but not due to negligence shall be documented in the institution's bi-weekly inventory with the following information:

- Serial number of vest inserts.
- Date placed into service.
- Unit in which used.
- Type of damage sustained.
- Brief description of circumstance and corrective action, if any.

- Items determined to be unserviceable due to negligence, intentional destruction, or loss will be reported by the next day of business to the Emergency Operations Section with the information required above, plus a copy of any documentation regarding adverse action.
- Requests for replacement of worn or damaged vest covers shall be submitted to Emergency Operations Section by the 15th of each month utilizing the CDC Form 1404, Action Request/Notification. Any circumstances other than routine wear shall require clarification prior to replacement.
- The Emergency Operations Section shall procure manufacturer replacements through the BSS and coordinate the exchange with the requesting institution.

Additional protective vests may be purchased for institutions which demonstrate a need based on augmentation of designated staff. Such need shall be addressed in detail to the Emergency Operations Section. CDC Form 1404 shall be submitted with any such request.

33020.17.4 Inventories

Each institution shall establish procedures to provide, at a minimum. a bi-weekly inventory of its protective vests. Institutions shall submit to the Emergency Operations Section a quarterly protective vest inventory by the 15th of the month following each quarter. The CDC Form 1405, Protective Vest Quarterly Inventory Summary shall be completed.

Protective vests which are secured as evidence shall be documented in the institution's bi-weekly inventory with the following information:

- Serial number of vest insert.
- Date and time of incident.
- Nature of incident.
- Nature of any injuries to the person wearing the vest.
- Weapons used, if any.
- Damage to vest, if any.
- Location of evidence storage area.

33020.17.5 Training

The introduction of protective vests into institutional lockup units represents a unique departure from the traditional safety practices heretofore used to deal effectively with management inmates. The Department shall implement a standardized training program for lockup unit employees to provide for the following concerns:

- The care and maintenance of the vest.
- The proper manner of wear to ensure maximum protection.
- A demonstration of the protective capabilities and deficiencies of the vest (Confidentiality shall be maintained).
- Wearer demeanor.
- Departmental/institutional expectations relative to prescribed wearing conditions.
- Departmental expectations and supervisory responsibilities relative to mandatory-wear assignments.

IST shall be mandatory for all supervisory lockup unit personnel. Line employees will receive required On the Job Training (OJT) instruction from their supervisors.

Certification

Each employee required to wear a protective vest shall receive the above training. Institutional training officers shall establish appropriate documentation reflecting course certification. Such record of certification shall be retained in the employee's training file.

33020.17.6 Local Operational Procedures

Each institution shall establish and review annually a local operational procedure which shall include, but not be limited to:

- Designating an inventory control officer by position title and number.
- Procedures for conducting weekly and quarterly inventories.
- Mandatory and optional wear provisions.
- Identified, secured storage areas to which no inmates have access.
- Provisions to ensure inmates shall never be allowed to handle protective inserts.
- Check in/check out procedures.
- Procedures for replacement of and procuring additional vests as required.

Cleaning and Care

The procedure shall include:

- Detailed schedule for cleaning.
- Designation of an employee, by duty assignment, to be responsible for the cleaning and maintenance of protective vest components.

- Provisions to ensure that protective inserts are cleaned:
- In the designated storage area.
  - Not less frequently than biweekly.
  - By wiping with a damp cloth or as directed by vendor maintenance labels.
  - Provisions to ensure a critical visual inspection of each insert cleaned to ascertain continued integrity of the nylon covering, stitching and wearability.
  - Provisions to ensure repair/replacement procedures are initiated immediately when protective inserts show evidence of damage or excessive wear.
  - The specific methods utilized to ensure that vest covers (outer garment) are dry cleaned on a daily basis to fulfill the personal hygiene needs of all employees.
  - Actions to be taken to ensure timely cleaning in the event of a lock down and/or dry cleaning equipment failure.
  - Adequate security precautions to ensure the continued functional capability of each vest cover to perform as a carrier for protective inserts.

33020.17.7 Refusal to Wear

Any employee whose assignment mandates the wearing of a protective vest and then refuses to wear the vest in the manner prescribed by the manufacturer's specifications and departmental training guidelines shall be subject to adverse action. The employee shall be reassigned to a non-mandatory wear assignment pending disposition of the adverse action.

33020.18 Revisions

The Deputy Director, Institutions Division, or designee, shall ensure that the content of this section is accurate and current.

33020.19 References

PC §§ 830.2(f), 830.31(a), 830.5(b), and 830.10.

CCR (2) § 599.726 et seq..

CCR (15) §§ 3291(b) and 3393.

ARTICLE 22 — ADVERSE PERSONNEL ACTIONS

Effective February 16, 1990

33030.1 Policy

It is the policy of the Department to apply the generally accepted principles of just cause, due process and progressive discipline when an adverse or other personnel action is taken.

33030.2 Purpose

The purpose of this section is to promote good personnel management and comply with applicable policy and standards through establishment of a uniform method of investigation, reporting and processing adverse personnel actions, Absent without Leave (AWOL) separations or other employer actions, e.g., denial of merit salary adjustment; transfer, demotion or termination for medical reasons; resignation; stipulation for resignation in lieu of adverse personnel action; administrative time off; letters of instruction; and rejection during probation.

33030.3 Just Cause

Adverse personnel actions taken against employees cannot be sustained where it is found that management acted in an arbitrary, capricious or discriminatory manner. The following guidelines may be used to determine if there is "just cause" for the action.

- The rules and standards shall be publicized and supervisors shall check to ensure that they are understood by employees.
- The rules shall reasonably relate to the job and the Department's standards and goals.
- The rules, standards, and instructions shall be enforced uniformly without discrimination. If enforcement has been lax, management shall not suddenly change direction and crack down without first warning employees of its intent.
- Normally there shall be evidence of previously attempted corrective action and warning.
- If adverse personnel action is taken for an employee's off-the-job behavior, management must establish that such behavior will have a negative impact on the employee's ability to perform his/her duties or that the behavior brings discredit to the Department.
- Management shall conduct an objective, thorough investigation.
- The investigation should produce sufficient evidence establishing proof before any action is taken.
- The action should fit the offense. The employee's employment record, position, and length of service shall be considered when determining which action to take. Therefore, two employees involved in the same behavior may have different types of adverse personnel action taken against them.
- When an act or omission by an employee is serious, it can be reasonably assumed that the employee would know that adverse personnel action would be taken.

Notwithstanding these guidelines, just cause does not preclude the most severe action based on the severity of the offense.

33030.4 Responsibility - Administrative

The Director ensures the implementation and compliance with the Department's adverse personnel action policy and program.

If the action is for termination of the employee, the Chief Deputy Director/Director shall also review the adverse personnel action package.

Office of Labor Relations

The Assistant Director, Office of Labor Relations, shall coordinate the review and processing of adverse personnel actions submitted to the deputy directors and serve as an adverse personnel action resource to the field and headquarters staff.

Deputy Directors

Each deputy director and assistant deputy director shall endorse and support the effective management of the adverse personnel action policy and program.

Hiring Authority

Each hiring authority shall:

- Take adverse personnel action whenever warranted by an employee's behavior/conduct.
- Appoint a staff member (generally the ERO) to be identified as the adverse personnel action coordinator. This staff member shall attend the hearings scheduled by the SPB Hearing Office in order to provide support to the deputy attorney general.
- Review and sign the Preliminary Notice of Adverse Personnel Action and the formal Notice of Adverse Personnel Action.
- For adverse personnel actions and rejections during probation only, meet with employee and the employee's representative, if requested, to discuss the action or consider any written request submitted by the employee or representative (See Skelly Hearing).
- Contact appropriate deputy director and/or the Assistant Director, Office of Labor Relations, if consultation appears appropriate, before agreeing to any modification, stipulation, or resignation affecting the proposed action.
- Confirm determinations of the Skelly Hearing by memorandum to the employee.
- Ensure that all documents are completed, correctly assembled, and routed as follows:
  - A copy of the adverse personnel action package shall be forwarded to the appropriate deputy director, by the Assistant Director, Office of Labor Relations. All original copies shall be retained at the sending location.
  - Upon notification of the review by the appropriate deputy director, the final notice of adverse personnel action shall be served on the employee with a copy of the action forwarded immediately to the employee's personnel/payroll office.
  - Where an action is modified at the Skelly Hearing, an amended notice of adverse personnel action shall be prepared containing any changes or modifications and served on the employee. Copies shall be forwarded to the SPB Hearing Office, the appropriate office of the Attorney General, the Office of Labor Relations, and the employee's personnel payroll office.

- If the action is withdrawn, notify the appropriate deputy director in writing.
  - A copy of the memo withdrawing the action shall be forwarded to the SPB Hearing Office, the appropriate office of the Attorney General, the Assistant Director, Office of Labor Relations, and the employee's personnel/payroll office.
- Inform the appropriate deputy director/Chief Deputy Director, assigned deputy attorney general, and the Assistant Director, Office of Labor Relations, of any new developments in the case.

33030.4.1 Responsibility - Adverse Personnel Action Coordinator

The adverse personnel action coordinator shall monitor the adverse action process and serve as liaison between the hiring authority and the following:

- Deputy Attorney General.
- SPB representatives.
- Office of Labor Relations.
- Law Enforcement and Investigations Unit.
- Employee representatives.
- Other proper participants in the process.

The adverse personnel action coordinator shall arrange for proper service and review of actions, with distribution as follows:

- SPB:
  - Forward one copy of the action, original Declaration of Service and transmittal letter within 15 calendar days of the effective date of the action.
  - Ensure the employee's social security number appears on all documents.
  - Do not forward supporting documentation.
- Attorney General, Office of Labor Relations:
  - Forward one copy of the notice, Declaration of Service and supporting documentation.
  - The Attorney General's package is forwarded only if the employee appeals the action.

In this case, attach a request for representation . Include the name and telephone number of the adverse personnel action coordinator.

- Local personnel/payroll office.
  - Forward one copy of the notice, Declaration of Service and supporting documentation.
- Service:
  - When possible the notice of adverse personnel action or rejection during probation shall be served upon the employee in person by a disinterested person (an individual who has not been involved in the investigation).

33030.4.2 Responsibility - Supervisors

Each supervisor shall:

- Recommend adverse personnel action against an employee when warranted by continued rule violations, misconduct and/or substandard work performance.
- Provide a copy of the declaration of service to the employee.

33030.4.3 Responsibility – Personnel Transactions

Local personnel/payroll staff shall process adverse personnel and other employer actions. Materials shall be filed in the employee's official personnel file.

33030.4.4 Responsibility - Clerical Support

Type the Preliminary Notice of Action on the departmental form memorandum.

Type formal Notice of Adverse Personnel Action on Department letterhead as follows:

- The type of notice in capital letters and centered four spaces below the letterhead.
- The employee's name, civil service classification, institution or parole region name and location, and current home address are typed in block style at the left-hand margin, four spaces below the title.
- Divide the body of the formal notice into sections indicated by Roman numerals as identified below:
  - I Statement of the Nature of the Adverse Action.
  - II Effective Date of This Adverse Action.
  - III Statement of Causes.
  - IV Statement of Facts.
  - V Statement as to Right to Answer and Appeal.
  - VI Statement as to Right to Respond to Your Appointing Power.
- Include notations explaining the meaning of abbreviations used in supporting documentation and, in the signature block of the notice, the typed name, work location, business address and telephone number of the hiring authority.
- Type and attach to the back of every notice either a Declaration of Personal Service or Declaration of Service by mail. Mail is certified as follows:
  - Type the name and home address of the employee in the space indicated on the "Receipt for Certified Mail" [PS Form 3800, which is available from a USPS office].

- Type the information required on the "Domestic Return Receipt" [PS Form 3811, also available at the USPS]. It is not necessary to register or insure the material sent to the employee. The number of the certified mail receipt [PS Form 3800] is typed in Item No. 4 in the block titled "Article No.". The name and address of the hiring authority is typed on the front in the space under "Return to".
- Address an envelope to the employee's current home address and type in capital letters in the lower left corner of the envelope the words, "Return Receipt Requested."
- Detach the body to the "Receipt for Certified Mail" (PS Form 3800) from stub and attach the stub directly above the words, "Return Receipt Requested" in the lower left corner of the envelope.
- Affix the "Domestic Return Receipt" (PS Form 3811) to the back of the sealed envelope.
- Arrange for the envelope to be mailed on the date indicated on the Declaration of Service. (Keep the Receipt for Certified Mail with the file copy of the notice; When the PS Form 3811 is returned, it should also be attached to the Receipt for Certified Mail and the file copy of the notice.)

33030.5 Types of Adverse Personnel Action

There are five types of adverse personnel actions as follows:

- Official Reprimand.
- Salary Reduction.
- Suspension.
- Demotion.
- Dismissal.

Adverse personnel action does not include rejections during probation, letters of instruction or corrective action.

All adverse personnel actions taken require approval of the appointing power, or designee.

33030.5.1 Definition of Adverse Personnel Action

This section defines five types of adverse actions.

Official Reprimand

An official reprimand is used when an action stronger than a corrective interview, counseling, or letter of instruction (but without a financial penalty) is necessary. A reprimand becomes an official part of the employee's personnel record. It is effective in making an employee realize that prior warnings, both verbal and written, are serious and can be followed by more serious actions. A reprimand is the lowest level of penalty in the adverse personnel action process.

Salary Reduction within the Salary Range of the Class

The salary reduction may be for one or more salary steps down to the minimum of the class. This is usually used in place of a suspension against an employee whose continued service on the job is of value to impress upon him/her the seriousness of the infraction. Normally, the length of this period is set in relation to the loss of pay which would have resulted from an appropriate suspension.

Suspension without Pay

Suspension may incur a penalty level from one work day to several pay periods dependent on the seriousness of the situation and the employee's prior work history. The suspension period shall be specified in either work days or calendar days. The suspension is considered as a temporary separation during which the employee does not work and salary is docked for a specified period of time. Any holiday falling within the time period is not counted as a working day.

Demotion to a Lower Class

Demotions are used when continued service is of value, but the employee is not working at the expected level of the classification. Demotion shall only be used when the employee qualifies for and can be expected to do a satisfactory job at the lower level.

Demotion may be to any salary in the next lower class that does not exceed the salary the employee last received; however, it is possible to demote to any lower class, within the promotional chain, at a lower than maximum salary. The action must contain the exact salary for each class. A demotion may be permanent or temporary; if temporary, the employee returns to the higher class on the date specified at the salary step determined by management.

Dismissal from State Service

Dismissal is appropriate for exceptionally serious infractions, continued failures in work performance and/or continuing offenses that can no longer be tolerated. Care should be taken to determine that the employee had adequate instruction and supervision, and was given reasonable opportunities to correct weaknesses. Dismissal is generally preceded by other forms of adverse personnel action; however, a dismissal may be made on the first infraction because of the seriousness of the circumstances. [See SPB rule 211 for additional information.]

33030.5.2 Causes of Adverse Personnel Action Defined

GC 19572 lists the reasons for which adverse personnel action may be taken against an employee. The reasons or charges are referred to as causes.

33030.5.2.1 Fraud in Securing Appointment

This is generally used only when employees falsify their education and/or experience to so great a degree that they would not otherwise have qualified for the position/job; or they omitted a criminal record and/or recent serious convictions. This cause is also used to cover cheating in examinations or otherwise using illegal help to obtain employment.

33030.5.2.2 Incompetency

This is used when an employee is lacking the qualities necessary for effective action; or is inadequate to or unsuitable for the assigned classification. The term is appropriate for application to inherent mental and physical abilities as well as lack of a necessary skill. Examples would be an employee who lacks the necessary mental, analytical ability to understand and apply the rules of the Director regarding inmate or parolee behavior, who is unable to perform a legitimate required task because of physical limitations, or who has not developed the skill necessary to perform required duties, such as firing a weapon or maintaining institutional security.

33030.5.2.3 Inefficiency

This is used when an employee is wasteful of time or energy, or not producing the desired effect. Inefficiency and incompetency are not interchangeable. The employee must be competent to perform the specific task before he/she can be considered inefficient. An example would be a competent typist who consistently produces significantly less than another typist doing like work. Another example would be a departmental peace officer who consistently takes excessive time making counts or fails to maintain acceptable activity levels or otherwise fails to produce at acceptable levels. Inefficiency may be established without evidence of violation of a specific rule.

33030.5.2.4 Inexcusable Neglect of Duty

The act or omission must relate to a duty imposed upon the employee by a specific job requirement or which can be inferred by the nature of the position held by the employee. The neglect must be intentional and without lawful excuse. As an example, an Officer who is en route to a serious confrontation between inmates may fail to stop an inmate from taking an extra ration of food from the kitchen. Such action would be excusable. On the other hand, an Officer refusing to apprehend an intoxicated inmate because it would make him/her late in ending his/her shift would be inexcusable neglect of duty.

33030.5.2.5 Insubordination

This is used when an employee is unwilling to submit to authority. Insubordination implies a general course of mutinous, disrespectful or obstinately disobedient conduct. Insubordination could be a series of acts of willful disobedience which portray a pattern or willful failure to submit to authority. A single act of failure or refusal to obey a direct order, if the refusal is in a mutinous, disrespectful or rebellious manner, would be insubordination.

33030.5.2.6 Dishonesty

This is used when an employee demonstrates a lack of honesty or integrity, a disposition to defraud or deceive, or commits a dishonest act. For purposes of adverse personnel action, a charge of dishonesty must be an act or series of acts which the employee knew, or reasonably could be expected to know, were dishonest or violations of law. Examples would be theft, embezzlement, deliberate falsification of reports, a pattern of lying to superiors, perjury, etc.

33030.5.2.7 Drunkenness on Duty

This means intoxication but not drinking on duty. A person who takes drinks during working hours but does not get drunk is not charged under this particular cause. In the latter case, it may be proper to use DOM 33030.5.2.3, 33030.5.2.4, 33030.5.2.8. 33030.5.2.17, or 33030.5.2.20. If intoxication is suspected, the degree of sobriety should be determined by a chemical test. Refusal of a request to submit to a chemical test based on reasonable suspicion is basis for insubordination charges.

33030.5.2.8 Intemperance

This means a lack of moderation in satisfying an appetite or passion; the habitual or excessive use of intoxicants. Intemperance as grounds for adverse personnel action normally is restricted to the excessive use of intoxicating beverages either on or off duty. The intemperance must be shown to have an effect on the employee's job performance. Usually intemperance will lead to incompetency or inefficiency or discredit upon the Department.

33030.5.2.9 Addiction to the Use of a Controlled Substance

The word "addiction" can be considered to imply the continued use of drugs or the compulsion to use them.

33030.5.2.10 Inexcusable Absence Without Leave

This applies to an employee who was absent without leave for any amount of time up to five consecutive working days. (Such an absence is covered under GC 19996.2 as an automatic resignation from state service.) This cause is used for tardiness, unapproved use of sick leave, vacation, compensating time off, or absence from the work area.

33030.5.2.11 Conviction of a Felony or a Misdemeanor Involving Moral Turpitude

The phrase "involving moral turpitude" can be explained as involving a vile, depraved, or base act or acts contrary to the moral standards generally acceptable within the community. Included would be incest, unlawful copulation with children, or other sex crimes. Under certain conditions, theft can be considered moral turpitude; however, in most cases, a charge of dishonesty is more appropriate for acts of theft. Also an action of possession of marijuana or other controlled substances for sales may be considered moral turpitude.

33030.5.2.12 Immorality

This means an action(s) conflicting with generally held moral principles. To support a charge of immorality, it is necessary to show a significant deviation from generally held moral principles. Therefore, such charge should be limited to an obvious deviation such as unlawful sexual acts with inmates, or unlawful sexual behavior with minors, etc.

33030.5.2.13 Discourteous Treatment of Public/Other Employees

This is used to support action against an employee who swears at, is rude to, or takes violent action against a supervisor or a fellow employee, or who fails to show proper courtesy toward the public. Discourtesy may occur on or off duty. This cause is often used in conjunction with DOM 33030.5.2.20 -- other failure of good behavior.

33030.5.2.14 Improper Political Activity

This cause is based on GC 3201 through 3209. Further restrictions are found in the Incompatible Activities Statement. A violation under this cause would also be under DOM 33030.5.2.18 -- incompatible activity.

33030.5.2.15 Willful Disobedience

Insubordination and willful disobedience overlap. Insofar as they are distinguishable, willful disobedience connotes a specific violation of command or prohibition while insubordination connotes a specific or general course of disrespectful or mutinous conduct. Failure to obey a direct order without disrespectful or mutinous conduct would be willful disobedience.

33030.5.2.16 Misuse of State Property

This applies to any case where an employee takes state equipment without authorization, damages state equipment because of lack of care, uses state equipment for personal business, or demonstrates lack of good judgment in the use of state equipment.

33030.5.2.17 Violation of SPB Rule 172

This should be used if there is a specific section which has been violated in the Civil Service Act (GC, Title 2, Division 5, Chapters 1 through 11). SPB Rule 172 (below) is a "catch-all" and should not be used solely if there are sufficient other specific causes which apply. It may be used for failure to meet a condition of employment, such as license requirements.

SPB rule 172, General Qualifications, states all candidates for, appointees to, and employees in the state civil service shall possess the general qualifications of integrity, honesty, sobriety, dependability, industry, thoroughness, accuracy, good judgment, initiative, resourcefulness, courtesy, ability to work cooperatively with others, willingness and ability to assume the responsibilities and to conform to the conditions of work characteristic of the employment, and a state of health, consistent with the ability to perform the assigned duties of the class. Where the position requires the driving of an automobile, the employee must have a valid state driver's license, a good driving record and is expected to drive the car safely. The foregoing general qualifications shall be deemed to be a part of the personal characteristics of the minimum qualifications of each class specification and need not be specifically set forth therein. The board may prescribe alternative or additional qualifications for individual classes and such shall be made a part of the class specification.

33030.5.2.18 Violation of GC 19990

All incompatible activity falls within this cause.

33030.5.2.19 Refusal to Take an Oath

Refusal to take and subscribe to any oath or affirmation which is required by law in connection with Department employment.

33030.5.2.20 Other Failure of Good Behavior

A public employee may not be disciplined for what he/she does in his/her private life so long as such conduct does not impair the public service or cause discredit to his/her agency. The act or acts which constitute "failure of good behavior" need not be known to some portion of the public before adverse personnel action can be brought against the employee. A charge of "other failure of good behavior" should be made only when the act or acts do not fall within some other section of the GC. Examples are driving under the influence of intoxicants when off duty; intoxicated in a public place coupled with inappropriate behavior; or inappropriate public behavior while wearing the uniform of a departmental peace officer.

33030.5.2.21 Negligence

Any negligence, recklessness, or intentional act which results in the death of a patient of a state hospital serving the mentally disabled or the developmentally disabled.

33030.5.2.22 Inappropriate Target Practice

During duty hours, the use of any material for training or target practice which is not authorized by the appointing power.

33030.5.2.23 Discrimination

Unlawful discrimination, including harassment, on the basis of race, religious creed, color, national origin, ancestry, physical handicap, marital status, sex, or age, against the public or other employees while acting in the capacity of a state employee.

33030.5.2.24 Retaliation

Unlawful retaliation against any other state officer or employee or member of the public who in good faith reports, discloses, divulges, or otherwise brings to the attention of, the Attorney General, or any other appropriate authority, any facts or information relative to actual or suspected violation of any law of this state or the U.S. occurring on the job or directly related thereto.

33030.6 Employee Performance Standards

Employee performance standards (i.e. expectations) are based on attendance, accuracy, production, relations with others on the job and other factors which affect the quality of work performance.

33030.6.1 Substandard Performance

If performance problems appear to be caused by physical or mental condition, then the employee affected should be advised to consider the use of the Department's EAP. See Section 31020 in this manual for further details on this program.

If the employee has repeatedly failed to improve after being advised that performance is substandard, the supervisor shall put the employee on notice that the performance requires correction and be prepared to show documentation that available means of correction have been attempted without success. Such documentation shall refer to performance reports, corrective interviews, incident reports, retraining, etc., which indicate unacceptable work and provide recommendations for improvement.

33030.6.2 Disregard for Rules and Regulations

If the employee has demonstrated a continued disregard for departmental rules or regulations, it must be shown that other available means of correction have been attempted without success.

Documentation

Documentation shall show that the employee was made aware of the required standards of conduct. This may be done by gathering evidence to show that the employee has knowledge of applicable written orders, or attended meetings or conferences where verbal instructions were given.

- Obtain copies of any written orders or instructions violated for inclusion in the final report as exhibits.
- Obtain dates, times, and names of supervisors conducting corrective interviews with the individual. Record the substance of the interview with emphasis on instructions for corrections given.
- If verbal orders are disobeyed, identify the supervisor who issued the order and show the order was given prior to the infraction.

All other types of training given the employee in an attempt to upgrade performance shall be documented. Documentation that the employee performs satisfactorily during supervised periods, training sessions, etc., then regresses when working alone, assists in establishing that the employee is working below capacity.

33030.7 Internal Affairs Investigation

Allegations of employee misconduct shall be promptly and thoroughly investigated, reported and audited.

- The Assistant Director, Law Enforcement and Investigations Unit, is designated as the Chief, Internal Affairs.

When the decision to take adverse personnel action is influenced by a Special Services Unit (SSU) Investigation report:

- Request copies of supporting documentation, recordings, etc. from the Assistant Director, Law Enforcement Liaison.
- Ensure that employees served with adverse personnel action simultaneously receive a copy of supporting SSU materials.

For further details refer to DOM 31140 regarding Internal Affairs Investigations.

33030.8 Disciplinary Compliance Review

A disciplinary compliance review process has been established to ensure that each employee receives fair and equal treatment during the disciplinary process.

33030.8.1 Uniform Schedule of Offenses

The Department's uniform schedule of offenses, which designates the investigative level for specific acts of misconduct, is designed to ensure that each employee, supervisor, manager, and administrator has a clear understanding of all departmental regulations, policies, and procedures .

33030.8.2 Application of Penalties

Each Warden, RPA, and other administrators having authority for employee discipline shall ensure that:

- Each employee receives fair, impartial, and consistent treatment during any adverse personnel action, regardless of the employee's position, assignment, or personal status.
- All disciplinary penalties are fair and consistent and in compliance with the Department's adverse personnel action policy.
- All recommendations for adverse personnel action are submitted to the appropriate deputy director for final action.

All penalties shall be reviewed for final action by:

- Deputy director having jurisdiction over the employee being disciplined.
- Office of Labor Relations.
- Director or Chief Deputy Director if penalty is for dismissal.

33030.8.3 Mitigating or Aggravating Circumstances

Administrators may consider mitigating or aggravating circumstances when assessing or recommending disciplinary penalties. A penalty recommendation which includes consideration of mitigating or aggravating circumstances shall be accompanied by full supporting documentation in writing when submitted to the deputy director for final action.

33030.9 Documentation

All communications pertaining to adverse personnel action and rejection during probation shall be treated as confidential communications. The following documents, when provided to an employee by mail or in person, shall require completion of a Declaration of Service.

- Notice of Adverse Personnel Action.
- Notice of Automatic Resignation (AWOL separation).
- Notice of transfer, demotion, or termination for medical reasons.
- Response to resignation.
- Stipulation for resignation in lieu of adverse personnel action.
- Notice of Leave of Absence Pending Investigation (Administrative Time Off).
- Notice of Rejection During Probationary Period.

33030.9.1 Format for Adverse Personnel Action Packages

Recommendation for adverse personnel action. A one page cover memorandum .

Summary of adverse personnel action .

- Problem: A short statement setting forth the overall summary of the act of misconduct.
- Conclusion: A short statement indicating the manner in which the allegations can be substantiated. Include a statement of the GC sections violated. When the basis for adverse personnel action evolves from one serious act or infraction, previous minor acts should not be listed as charges, but should be included in the report as cumulative evidence to show a pattern of behavior.
- Additional Information: A summary of pertinent and extenuating information that would not be provided elsewhere in the report. For example, a personal or family illness, or any other extenuating circumstance that could legitimately have a bearing upon the case.
- Review Levels: A signature block noting review and comments by the hiring authority.

Investigation Report

Investigation Report:

- Work History: A biographical summary of the employee's employment history:
  - Location and dates of assignment.
  - Prior adverse personnel actions. List causes and dates.
  - Special commendations (restricted to departmental commendations on commendations from other agencies). Do not include routine letters of thanks or routine training certificates of accomplishment.
  - Incident reports-commendable and censurable. (Include any current letters of instructions.)
- Chronological Summary of the Investigation: Write the summary as briefly and concisely as possible. Supporting reports, documents, and complete statements should be included as exhibits and referenced in the chronological summary.
  - The summary shall be in chronological sequence based on the steps taken by the investigator beginning with receipt of the information that precipitated the investigation.
  - Briefly describe each act of misconduct that supports the allegation.

- Obtain dates, times, and the names of supervisors conducting corrective interviews. Copies or corrective memorandums, incident reports, etc., shall be included as exhibits.

- Summary of Witnesses Statements : Prepare a list of witnesses.
  - Include the witnesses' full name and, if State employee, civil service classification title.
  - Under each name, identify the facts of the case of which the witness shall testify.
  - Briefly summarize witnesses' statements in the sequence they were developed. The summary should contain all pertinent points contained in the statement.
- Attachments: All documents gathered during the investigation, including signed statements, transcripts, vouchers, receipts, performance reports, incident reports, photographs, CDC Form 602 (Inmate/Parolee Appeal).

33030.9.2 Preliminary Notice of Adverse Personnel Action

When the adverse personnel action investigation produces evidence of misconduct, the hiring authority shall provide the affected employee with a Preliminary Notice of Adverse Personnel Action . This notice summarizes the specific subsections of the GC that have been violated, as well as the actions that constituted the violation.

- Attach to the Preliminary Notice all copies of the documentation used to substantiate the charges in the action.
- This notice shall be served on management employees at least 20 days prior to the effective date of the adverse personnel action.

A copy of the Preliminary Notice and all documentation shall be placed in the adverse personnel action package submitted for review to the appropriate deputy director, by the Assistant Director, Office of Labor Relations.

33030.9.3 Setting the Effective Date

After consulting with the employee's personnel/payroll office, the hiring authority shall determine the effective date(s) of the adverse personnel action after allowance for the Skelly period (minimum of five calendar days). Consideration shall be given to the following:

- Suspensions shall be computed on a 24-hour working day basis, excluding legal holidays and regular days off. Holidays are not considered working days for suspension. There is no pay for a holiday occurring during a period of suspension. Holidays occurring during a period of suspension in effect increase the penalty by one day and such scheduling shall be avoided whenever possible. (Example: Four working days suspension for the period of July 1,___, 0800 hours, through July 6, ___, 0759 hours; employee loses five days pay).
- Time absent on suspension may delay the employee's next merit salary adjustment (MSA) and may affect the earnings of vacation and sick leave credits (refer to DOM or a personnel specialist).
- In computing reductions in salary, the effective date of reduction shall coincide with the beginning of a pay period and amounts shall coincide with the existing salary range.
- The effective date of the action shall be immediate or as soon as possible after service upon the employee; avoid delaying the effective date of an action.
- Effective dates for all actions involving pay issues shall be coordinated with the employee's personnel/payroll office to avoid overpayment situations.

33030.10 Use of Administrative Time Off (ATO)

Employees should only be placed on ATO who are in most cases subject to dismissal because they:

- Have been charged with a felony.
- Are suspected of smuggling contraband.
- Have shown unacceptable familiarity with inmates.
- Have seriously jeopardized the security of the institution.
- Have committed any other serious infraction of the CCR.

The employees' continued presence at the work site must adversely affect the security or management of the facility. A Notice of Leave of Absence Pending Investigation (ATO) is required.

Authority (GC 11152)

"Subject to the approval of the Governor, the head of each department may arrange and classify the work of the department and consolidate, abolish, or create divisions thereof. So far as consistent with law the head of each department may adopt such rules and regulations as are necessary to govern the activities of the department and may assign to its officers and employees such duties as he sees fit. For the betterment of the public service, he may reassign to any employee under the chief of any division, such duties as he sees fit".

Limitation on Length of Paid Leave of Absence (GC 19991.10)

"Where there exists no statutory authority to grant a paid leave of absence, no paid leave of absence shall exceed five working days without prior approval of the Department . This section shall not be construed to provide or create any classification of paid leave of absence."

33030.10.1 Responsibility

Request for Administrative Time Off (ATO)

Hiring authority:

- Request o place employee on ATO:
  - All requests for placing an employee on ATO must be telephonically approved through the appropriate deputy director.
  - Initial approval for ATO by the deputy director shall be granted for five working days.
  - The requesting unit shall notify the labor relations office immediately so labor relations personnel can follow up the request in writing.
- Requests to continue an employee on ATO beyond five working days:
  - Appropriate deputy director must again be contacted before the employee's fifth working day on ATO to request additional days of ATO.

- Requests to continue employee on ATO beyond ten working days:
  - Appropriate deputy director shall ascertain the status and notify the Chief Deputy Director that the employee is to be continued on ATO beyond ten working days.
- If it is determined that the employee needs to be continued on ATO beyond fifteen working days, the Chief Deputy Director must request approval from the DPA , in writing, prior to the fifteenth work day.

Calculation of ATO Period

The ATO period shall commence when approval has been received from the appropriate deputy director and the employee has been effectively notified of his/her placement on ATO status.

The five-day Skelly period shall not be included in the ATO period.

If an employee on ATO is to return to work, he/she should be contacted and ordered to do so. There should be no confusion regarding either the expectation that the employee return to work or the reporting date and time. Additionally, it may be useful to confirm the order in writing.

Employee Responsibilities

When placed on ATO, an employee shall be given a written notice that contains the following:

- The individual is still an employee of the Department and shall be available during the normal business hours of the Department, i.e., Monday through Friday, 8:00 a.m. through 5:00 p.m. Any state holidays observed during the work week shall be excepted.
- He/she must be reachable by telephone.
- The employee may leave the immediate area to complete necessary errands, i.e., medical appointments or other necessary business that normally can only be completed during the business day. However, the employee must respond to the Department's attempt to contact him/her within a reasonable period of time. The reasonableness of the employee's response shall be determined by the type of errand, distance traveled and any other factors peculiar to the area which might affect the employee's ability to return the call.
- The expectation is that, generally, the response time of the employee shall be less than two hours.
- Emergency situations may affect this time frame and are subject to hiring authority approval.
- The hiring authority shall ensure employee responsibilities are adhered to.

State Property

At the time an employee, who is subject to adverse personnel action, is placed on ATO, the hiring authority shall require the employee to surrender his/her state-issued property.

Peace Officer Authorization

If a peace officer is placed on ATO, the hiring authority may, based on the circumstances, rescind the peace officer authorization to carry a concealed weapon off-duty. The rescission notice shall be in writing and given to the employee.

33030.11 Skelly Hearing

SPB Rule 61

The Skelly decision applies to employees with permanent and probationary civil service status. This rule, which is based on a California Supreme Court decision (Skelly v. SPB) rendered September 16, 1975, states:

"Right to Respond to Charges Prior to Punitive Action. At least five calendar days prior to an effective date of any punitive action against an employee with permanent civil service status, the appointing power or any person authorized by it shall give the employee written notice of the proposed action, the reasons for such action, a copy of the charges and material upon which the action is based, and the right to respond either verbally or in writing, to the authority proposing the action prior to its effective date."

Request for Hearing

All employees who have an adverse personnel action or rejection during probation brought against them have a right, upon request, to a Skelly Hearing.

- The period of time from the date of service of the adverse personnel action on the employee to the effective date of the action shall be termed the Skelly period.
- The employee shall be permitted, upon request during the Skelly period, an opportunity to rebut the charges verbally or in writing to the hiring authority.
- The employee may be permitted a reasonable amount of state time to inspect any documentation that is on file relevant to the action and to prepare a rebuttal to the charges. The amount of time shall be determined by the hiring authority based upon the length and complexity of the case.

Representation

The employee shall be allowed representation during the Skelly Hearing (see Section 33030.11).

Role of the employee representative at Skelly Hearings. These principles do not apply to investigatory interviews.

- If the employee is accompanied by a representative at the Skelly Hearing, the employee representative may speak for or in conjunction with the employee being represented. There is no requirement that the employee must personally respond to questions or personally present information at a Skelly Hearing. The employee may, in fact, remain silent.
- The employee representative is not to impede the Skelly Hearing process nor become a cross-examiner of the person conducting the Skelly Hearing.

Hiring Authority

The hiring authority shall hold a Skelly Hearing if requested by the employee.

- The hearing shall be conducted by a management employee who has the authority to sustain, withdraw, or modify the adverse personnel action penalty.
- Tape recordings of the Skelly Hearing shall not be permitted.
- The employee shall be notified in writing of the results of the hearing.

- The distribution of the results shall be the same as the final notice of adverse personnel action.

33030.12 Employee Representation Rights Under Adverse Personnel Action

Employees with permanent or probationary status (regardless of time base) are entitled to representation at all stages of the adverse personnel action procedure.

This representation may be the exclusive representative (union) if rank-and-file, or personal advisor, attorney or another state employee during interviews/interrogations that may lead to adverse personnel action. This is appropriate during Skelly or appeal hearings related to the adverse personnel action.

- Employees who are possible subjects in the investigation are excluded as employee representatives.

TAU Appointments

Employees with a temporary authorization (TAU) appointment status are not necessarily entitled to have a representative present during an interview which is preparatory to a separation from the TAU appointment. However, if a proposed action against an employee in this status is attributable to a specific incident that would have resulted in an adverse personnel action, investigatory interviews shall be handled like adverse personnel action cases and employee representation shall be allowed.

Peace Officers

All employees designated by the Director, or by the Penal Code, as peace officers, both probationary and permanent, are fully guaranteed their peace officers procedural bill of rights (GC 3300 through 3311) during any adverse personnel action procedure, including related interviews and investigations.

State Time

Use of state time is restricted and shall be approved by the employee's supervisor.

- Absent an emergency, employees may request and shall be allowed reasonable state time by the supervisor to contact/secure a representative and to discuss the matter prior to any meeting/interview regarding an adverse personnel action.
- The employee shall also be allowed reasonable state time to prepare for the interview/meeting with the representative.
- Job stewards shall be allowed reasonable time for the purpose of representing employees during working hours without loss of compensation. No other employee representative shall be allowed to confer with employees on state time.

Interview

If the purpose of the interview is to consider adverse personnel action, to follow up on an adverse personnel action which has begun, or to conclude the adverse personnel action, the employee shall be informed of this and advised of the right to representation.

If an employee representative is present, he/she shall not impede the interview process nor cross-examine the interviewing panel. The representative may assist the employee in understanding the questions asked by the panel.

- The employee is required to respond to questions relating to employment. Refusal to respond to the interviewer's questions may constitute grounds for adverse personnel action.
- The employee representative shall not respond for the employee to the questions.
- The representative shall be allowed, upon request, an opportunity to provide to the interviewing panel any additional information which is relevant to the investigation.
- This may include both written and oral statements from the employee or the representative.
- The representative shall be allowed to request a break during the proceedings to consult with the employee.
- The break shall be limited to a reasonable period of time and shall not be used as a means to disrupt the proceedings.

Polgraph Examinations

An employee shall not be ordered to submit to a polygraph examination; however, in those instances when an employee volunteers to take the examinations, representation shall be permitted upon the employee's request as follows:

- An employee shall be given a reasonable amount of time (not to exceed 24 hours) to secure a representative who may be present during the pre-test interview for observation purposes only.
- An employee is not entitled to have a representative present during the administration of a polygraph examination.
- After the examiner has developed the relevant questions regarding the issue(s) which are to be used in the polygraph examination, these questions may be shared with the employee representative only.
- If the employee representative objects to the use of any specific question(s), the examiner shall consider the objection(s) and may drop, modify, or use the formulated questions.
- The employee shall not be allowed to hear any objections to questions, and the employee representative shall not discuss the questions with the employee prior to the examination.
- The employee representative shall be allowed to observe the explanation of the results. For further details refer to DOM 14030 regarding polygraph.

33030.13 Appeals of Adverse Personnel Actions to SPB

Filing Deadline

No later than 20 calendar days after service of a final "Notice of Adverse Personnel Action", or 15 days after service of a final "Notice of Rejection during Probationary Period", the affected employee may file directly with the SPB a written answer to the notice. Such an answer shall be deemed to be a request for a hearing or investigation as provided in the GC.

Failure to File

If the employee fails to file an appeal within the above specified time, the adverse personnel action taken by the appointing power shall be final.

Failure to Appear

Following the timely filing of an appeal, failure of the employee to appear at the hearing shall be deemed withdrawal of the employee's appeal and the action of the appointing power shall be final.

Disposition of Supplemental Information/ Evidence Upon Notification by Attorney General

When the Attorney General notifies the Assistant Director, Office of Labor Relations, that an adverse personnel action file is being closed, the Assistant Director shall notify the hiring authority originating the action to allow them to dispose of supplemental information and any remaining evidence.

33030.14 Stipulations for Settlement or Resignations In Lieu of an Adverse Personnel Action

Occasionally, an employee or his/her representative may request an agreement on a stipulation or may offer to resign. This usually represents an attempt to negotiate a compromise or to terminate employment in a way that precludes the recording of an adverse personnel action.

Offer

When an offer for settlement is proposed to the hiring authority by the employee/employee's representative, the assigned deputy attorney general shall be notified of the offer. All such stipulations must be approved by the hiring authority and appropriate deputy director.

Preparer

Stipulations for settlement may be prepared by the employee's representative or by the assigned deputy attorney general. Occasionally, a stipulation may be prepared locally. Stipulations require signature approval of all parties concerned.

Terms

Each term of the stipulation shall be reviewed to determine its appropriateness. Terms that are contrary to accepted Department personnel policy and procedure should not be incorporated into the stipulation. The Office of Labor Relations may be contacted for advisement on stipulation format and terms.

Prior to formal agreement to the terms of the stipulation, the appropriate deputy director shall be contacted for concurrence.

The original stipulation for signature by the appropriate deputy director shall be forwarded to Central Office, by the Assistant Director, Office of Labor Relations, for processing.

If an agreement cannot be reached on the stipulation for settlement, the Department shall continue with the adverse personnel action taken.

After adverse personnel action proceedings have been terminated, a brief personnel investigation report shall be completed. This report serves as a basis for rejection of a re-employment request and for answers to any official inquiries. It should be noted in this report that the employee's resignation was not made under duress and that the guidelines provided below (Section 33030.16.1) were followed where practicable.

33030.14.1 Duress or Undue Influence

Supervisors shall not exert undue influence nor subject employees to duress in order to obtain a resignation. Care must be taken to avoid making statements that could be the basis for an appeal by the employee to have a resignation set aside on grounds it was obtained by duress, undue influence, or excessive persuasion.

The following elements are characterized as excessive persuasion:

- Discussion of the resignation at an unusual or inappropriate time.
- Consummation of the resignation in an unusual place.
- Insistent demand that the transaction be completed at once.
- Extreme emphasis on unfavorable consequences of a delay.
- The use of multiple persuaders by the Department against the employee standing alone.
- Denial of the time or the opportunity for the employee to consult an advisor.

33030.14.2 Acceptance of Resignation

When an employee indicates an intention to resign his/her position because of an alleged act of misconduct, a "with fault" resignation shall not be accepted unless it results from a stipulated settlement agreement.

33030.15 Managerial Employees

This section shall apply to those employees who have been appointed after January 1, 1984, as a designated managerial employee under GC 3513 (Ralph C. Dills Act), but who are not in a career executive category.

Causes of Action

The managerial employee may be disciplined for all causes listed under Section 33030.5.2 except for any cause constituting prohibited discrimination as found in GC 19700 through 19703.

Case Preparation Documentation and Transmittal

The request for adverse personnel action shall be initiated and processed in the manner outlined in Section 33030.9. This shall include the manager's right to representation and application of Public Safety Officers Procedural Bill of Rights protections.

Service of the Formal Adverse Personnel Action

The hiring authority shall serve the manager with written Notice of Adverse Personnel Action with the reasons for the action twenty (20) days prior to the effective date.

The manager shall have the right to respond to the hiring authority orally or in writing within ten days after receipt of the Notice of Adverse Personnel Action.

A copy of the Notice of Adverse Personnel Action, the Declaration of Service, and supportive documents shall be forwarded to the AG’s Office and the employee's personnel/payroll office.

A copy of the Notice of Adverse Personnel Action and the original of the Declaration of Service shall be filed with the SPB within fifteen calendar days after the effective date of the action.

Burden of Proof

The manager shall have the burden of proof. If the action is appealed, the SPB determines whether the action is free from fraud and bad faith and whether the statement of reasons in the Notice of Adverse Personnel Action is true.

52050.16 Hiring Authority Alternatives

This section contains some hiring authority alternatives in lieu of the normal adverse personnel action procedures.

33030.16.1 Letters of Instruction

A letter of instruction is a communication tool for improving employee work performance. Its objectives are:

- To document discussions relative to an employee's job performance and/or behavior which are not acceptable.
- To outline the expectations required to bring the employee's job performance up to an acceptable level.

A face-to-face discussion between the supervisor and employee is necessary in conjunction with a letter of instruction in order to ensure that the employee understands what the problem is and what he/she is expected to do in order to correct it.

Letter of Instruction Format

Official departmental memorandum shall be used:

- Entitled, "Letter of Instruction".
- Clearly addressed to employee.
- Clearly state the nature and circumstances of the problem:
  - Cite previous discussions with employee.
- Clearly state exactly what standards of performance are expected from the employee:
  - Include results of face-to-face discussion.
- Develop a plan by which the employee is to meet the expected performance:
  - IST classes and other appropriate classroom training.
  - OJT.
  - Read procedures, manuals, books, etc.
- Establish time frames for meeting expectations:
  - Include supervisor's follow-up.
  - "Special" performance evaluations.
- Include statement of how long the letter will remain in the personnel file:
  - Not more than one year.
  - May be removed at supervisor's discretion if expectations are fully met.
- Make a statement that the letter of instruction is not an adverse personnel action but is a formal documentation of expected work performance.

Review applicable Memorandum of Understanding to determine its effect or control on the letter of instruction.

Approval and Routing

The letter of instruction shall be signed by the supervisor and the employee, and a copy given to the employee.

- "Approved for Placement in Personnel File" signature space for hiring authority.

Attach route slip with all other signature spaces, for informing the chain of command, if required at your location.

A copy of the letter of instruction shall be forwarded to the personnel office for placement in the employee's official personnel file.

33030.16.2 Denial of Merit Salary Adjustment

Denial of Merit Salary Adjustment

The denial of a merit salary adjustment (MSA) is often viewed by employees and supervisors as a form of adverse personnel action. It is not an adverse personnel action and, therefore, should not be viewed as one. The fact that the statutes refer to this process as a "merit" adjustment implies that the employee is "entitled" to it only after demonstrating proficiency in the position.

Supervisor Recommendation

If, at the end of the required period of "time-in-grade" requirements, a supervisor can, based on documented performance, certify that an employee has met the required standards of performance, he/she recommends that the employee receive an MSA. Conversely, if the supervisor determines that the employee is not functioning at an acceptable level of performance, based on documented performance, the supervisor notifies the employee of his/her decision, and recommends that the MSA not be granted.

Appeal

An employee notified of the denial of an MSA may, within ten days, grieve the supervisor's decision through the established excluded employee grievance procedure, or the grievance procedure in an applicable Memorandum of Understanding. As with any other grievance, the supervisor's decision may be sustained or overturned at any level. When the employee has exhausted all departmental levels of review, or has properly appealed through the applicable Memorandum of Understanding, denial of the MSA may be appealed, within fifteen days, to the DPA.

Evidence

The "burden of proof" is upon the appointing authority to present substantial evidence in support of the decision to deny an MSA. Evidence should consist of performance appraisals, records of work improvement discussion and/or adverse personnel actions.

Notification

An employee must be notified of the decision to deny a MSA.

Reconsideration

A denied MSA may be reconsidered at any time after three months have elapsed and must be reconsidered after one year.

33030.16.3 Transfer, Demotion or Termination for Medical Reasons

Criteria

If an employee is unable because of medical reasons to perform the work of his/her present class but is able to perform the work of another class, he/she may be transferred or demoted. If an employee is unable because of medical reasons to perform the work of his/her present position or any other position in his/her department, he/she may be terminated.

- A permanent or probationary employee may be terminated for medical reasons regardless of disability retirement eligibility.

Medical Examination

Determination of an employee's inability to perform because of medical reasons is made by the appointing authority based on pertinent medical information. The appointing authority may require an employee to submit to a medical examination, by a physician selected by the appointing authority, to evaluate the capacity of the employee to perform the work of his/her position. Fees for the medical examination are paid by the state.

Reasonable Accommodation

Prior to terminating an employee for medical reasons, the appointing power must make an effort to locate a position, in the department or in another department, to which the employee could transfer or demote.

Notification

The hiring authority must give the employee written notice of demotion, transfer or termination for medical reasons at least 15 calendar days prior to the effective date. The notice must inform the employee' that he/she may appeal the action by filing a written appeal with the DPA no later than 15 days after service of the notice. It must also contain an explanation of the conditions for reinstatement or re-employment list eligibility.

33030.17 Absence Without Leave (AWOL) – Automatic Resignation

An employee who is absent without approved leave for five consecutive working days, whether voluntary or involuntary, may be terminated as an automatic resignation per GC 19996.2.

- An employee is deemed AWOL in the following situations:
  - Does not report for work; does not contact the supervisor/hiring authority.
  - Leaves the work site without approval.
  - Takes time off without approval.
  - Takes time off even though the time was disapproved.
  - Does not return from a leave of absence, vacation, or sick leave.
  - Does not submit a letter of resignation.

Note: Before processing an AWOL separation, notify the adverse personnel action coordinator in the Office of Labor Relations.

33030.17.1 AWOL Procedure

Warning Letter

A warning letter shall be sent to the employee on or about the third day of unauthorized absence. The letter shall be accompanied by a proof of service by mail.

- The warning letter shall indicate the employee is absent without leave, whether voluntary or involuntary, and that absence for five consecutive workdays is an automatic resignation from state service.
- A contact person and alternate person, at the work location, with an appropriate telephone number, shall be identified in the letter.
- The letter shall inform the employee that failure to contact the identified staff person within the five consecutive workdays shall effect the separation from state service.
- Other reasonable efforts shall be made to contact the employee by telephone or in person during the five working day period. Each attempted contact shall be documented by the caller/visitor. A reasonable search shall be made to verify the contact telephone number or the whereabouts of the employee.

Notice of Automatic Resignation

Once the employee has been absent without leave for five consecutive workdays, written notice of automatic resignation must be sent to the employee.

- The notice must include the right to respond to the appointing authority at a Skelly Hearing and the right to appeal the action.
- The effective date of the resignation is the last date the employee worked.
- A proof of service shall also be attached to the notice.

33030.18 Rejection During Probation

The probationary period served by the state employee is a part of the initial selection process.

Cause for Rejection

An employee may be terminated at any time during this period for reasons relating to his qualifications, good of the Department, or failure to demonstrate merit, efficiency, fitness, and moral responsibility (GC 19173). The effective date of the rejection shall not be later than the last day of the employee's probationary period except to allow for the Skelly time period. [Refer to SPB Rule 321(c).]

Rejections during probation do not bear the same stigma or restrictions for further state service as would an adverse personnel action of dismissal. The request for rejection during probation shall be initiated, documented, and submitted in the same manner as a request for adverse personnel action using the reasons set

forth in GC 19173. It shall be titled "Request for Rejection during Probation". The request for rejection during probation shall include copies of the employee's probationary reports and any other documentation substantiating the request.

Employee Rights

All probationary employees who are subject to rejection during probation are to be granted the same rights provided to a permanent employee as outlined in this manual.

- The employee shall be granted the same rights as provided for in the Skelly decision. The employee shall be provided a copy of the documentation and seven calendar days to respond.
- The employee shall be allowed to have a representative present, upon request, during interviews or discussions regarding the possibility of rejection during probation. This shall include discussions of a probationary evaluation report where a less than standard rating is noted in any of the major categories.
- A reasonable amount of state time shall be allowed for a representative to review the charges or to assist the employee.
- A probationary employee gains permanent employment status by being employed one day beyond the probationary period. Since this action, provided in the SPB rules, is irreversible, it is recommended all procedures required to reject an employee on probation shall be initiated in reasonable time prior to the expiration of the probation date. It is particularly important to consider the time allocated for the Skelly period.

Extensions

A probationary period may only be extended if the minimum number of days specified for the probationary period prescribed for the class have not been worked or it is necessary to provide the full notice period to meet the Skelly Hearing requirements.

- When a probationary employee has not worked the minimum number of hours set forth during their prescribed probationary period, the probation period may be automatically extended until the required number of hours have been worked. Refer to the SPB Rule 321 for specific number of minimum hours. Also, contact the employee's personnel/payroll office for a calculation of the extension and to process the extension.
    - The employee and the SPB shall be notified in writing when the probationary period is being extended with the length of the extension specified.
- The probationary period may also be extended when a probationer is going to be rejected at the end of the probationary period and the Skelly Hearing period cannot be provided prior to the last day of the probationary period. However, the employee must be served with the Notice of Rejection During Probation prior to the end of their probationary period.
    - After consideration of security concerns, employee may be allowed to work through the extension period.
    - The final Notice of Rejection During Probationary Period shall indicate the original completion date of probation and the new extended date to provide for a Skelly Hearing if extension is needed. As an example, the first paragraph of the Notice of Rejection during Probationary Period letter should read:
    - "You are hereby notified that under the provision of GC 19173, you are rejected effective at the close of business on June 6, 1986, from your position of (classification) with the Department of Corrections, at the (name of facility/location). Your probationary period officially ending May 30, 1986 has been extended to June 6, 1986 pursuant to SPB Rule 321(c)."
    - The remaining portions of the notice shall continue to be the same.

Distribution of Documents

The original Notice of Rejection during Probationary Period, Declaration of Service, and supportive documents shall be served on the employee.

Forward a copy of the Notice of Rejection During Probationary Period, the Declaration of Service, and the supportive documents to the appropriate deputy director, to the Office of Labor Relations, and to the appropriate office of the Attorney General.

Send a copy of the Notice of Rejection During Probationary Period and the original of the Declaration of Service to the appropriate personnel transactions office and the SPB. The SPB must receive their copy within 15 calendar days of the date of service. Failure to file such notice within the statutory period may render the entire proceeding void.

If the employee had attained permanent status in another class, he/she may have a right of return to a former position. (See GC 19140.5 for further information.)

Right of Return

If the employee came from another department, the hiring authority shall ensure that the personnel office of the other department is notified that the employee will be rejected.

If the employee has a right of return, it shall be so stated in the Notice of Rejection During Probationary Period.

Cadet Rejections

All rejections during probation of cadets at the Academy shall be processed by the Academy Administrator. Rejection during probation of Academy staff shall be processed as outlined in sections on adverse personnel action documentation.

33030.19 Revisions

The Assistant Director, Office of Labor Relations, shall ensure that the content of this section is accurate and current.

33030.20 References

SPB Rules

DPA Rules.

ACA, Standards 2-4067, 2-3032, 2-2032.

CCR (15).

DPA letter of March 15, 1985, Administrative Time Off from Mr. David Tirapelle, Chief, Programs and Policy Division.